CITY OF CALLAWAY, FLORIDA
CITY HALL
6601 East Highway 22, Callaway, FL 32404
Phone 850-871-6000 • FAX 850-871-2444
www.cityofcallaway.com

Mayor
Thomas W. Abbott

Commissioners
Melba Covey
Pamn Henderson
Bob Pelletier
Ralph L. Hollister

MEMORANDUM

DATE: December 3, 2014

RE: November Employee of the Month

FROM: The City Manager's Office

City Manager Fuller affirmed Director Legare's nomination of Anthony "Tony" Roulhac of Leisure Services for Employee of the Month. Mr. Roulhac has been employed by the City of Callaway since March 4, 2014. Soon after he was hired as a groundskeeper the City's Sports Field Specialist took extended leave because of a job related injury. Since then, Mr. Roulhac has stepped up to help cover the responsibilities of our Sports Field Specialist. He is a very dependable and hard worker who learns quickly. He has learned how to prep all of our sports fields for competitive play, keeping in mind player safety and aesthetics. This includes grooming, chalking, painting, measuring, pulling string line and paying attention to detail. Mr. Roulhac has never complained and excelled at all work tasks. Tony is a rare find and we are fortunate to have him in the Leisure Services Department!

Employee of the Month

NOVEMBER 2014

Presented to

Anthony "Tony" Roulhac

Thank you, Tony for your attention to detail, your positive attitude and your ongoing dedication to our City, Citizens and Staff.

Mayor

City Manager

City of Callaway Board of Commissioners
Agenda Item Summary

December 9, 2014

Proclamation Hazardous Materials Awareness Week

1. PLACED ON AGENDA BY:

Mayor Thomas Abbott

2. AGENDA:

PRESENTATION ☒
PUBLIC HEARING ☐
CONSENT ☐
OLD BUSINESS ☐
REGULAR ☐

3. IS THIS ITEM BUDGETED (IF APPLICABLE)?: YES ☐ NO ☐

N/A

4. BACKGROUND: (WHY, WHAT, WHO, WHERE, WHEN, HOW, & IDENTIFY ALL ATTACHMENTS)

To heighten awareness in Florida communities of the presence of hazardous materials and the potential risks they pose to the health of citizens and to the environment, it is requested that the City of Callaway issue a proclamation designating the week of February 15th to 21st, 2015 as Hazardous Materials Awareness Week. The State of Florida District 1 Local Emergency Planning Committee has designated this week as Hazardous Materials Awareness Week. Accordingly, the West Florida Regional Planning Council passed Resolution #2014-08 declaring February 15-21, 2015 as District 1 LEPC's Hazardous Materials Awareness Week. The attached Proclamation would proclaim the same throughout the City of Callaway.

ATTACHMENT:

- Proclamation of the City

5. REQUESTED MOTION/ACTION:

Staff recommends the City Commission issue the Proclamation establishing the week of February 15-21, 2015 as District 1 LEPC's Hazardous Materials Awareness Week.

PROCLAMATION

WHEREAS, the safe use of hazardous materials is essential to citizens, business, industry, and local governments to maintain economic stability and the public health; and

WHEREAS, the District 1 Local Emergency Planning Committee (LEPC) recognizes the importance of protecting our communities from both accidental and deliberate releases of hazardous materials and carrying out state and federal duties to publicly promote statewide hazardous materials safety; and

WHEREAS, it is essential to increase community preparedness so that both public-sector and private-sector employees know how to safely protect themselves and those for whom they are responsible during an accidental or deliberate release of hazardous materials; and

WHEREAS, the LEPC offers awareness level hazardous materials emergency response training for firefighters, law enforcement, and other public safety personnel as well as Shelter-in-Place presentations to community groups, businesses, schools, and the general public as a means of increasing safety in the event of a release; and

WHEREAS, citizens need to know that emergency responders, emergency management, all levels of government, schools, and businesses are working together to ensure that our communities are as prepared as possible to protect all citizens from both accidental and deliberate releases of hazardous materials,

NOW THEREFORE, I, **Thomas Abbott**, by virtue of the authority vested in me as Mayor of the **City of Callaway**, do hereby proclaim the week of **February 15-21, 2015**, as

"District 1 LEPC Hazardous Materials Awareness Week"

throughout the city, to heighten public recognition of efforts to safeguard the community from hazardous materials and to acknowledge the unique public participation component of the program.

IN WITNESS WHEREOF, I have hereunto set my hand and cause the Official Seal of the **City of Callaway**, to be affixed this _____ day of December, 2014.

_____

Thomas W. Abbott, Mayor

ATTESTED TO:

_____

Sandy Hirth, City Clerk

CALLAWAY BOARD OF COMMISSIONERS REGULAR MEETING
NOVEMBER 12, 2014
TIME: 6:00 P.M.

The Regular Meeting of the City of Callaway Board of Commissioners was called to order by Mayor Abbott at 6:00 P.M. Commissioner Pelletier gave the invocation and Commissioner Hollister led the Pledge of Allegiance.

ROLL CALL: Commissioner Covey, Commissioner Henderson, Commissioner Pelletier, Commissioner Hollister, Mayor Abbott

ALSO PRESENT: City Manager Fuller, City Attorney Obos, Fire Chief Joyner, Leisure Services Director Legare, Code Enforcement Officer Frye, Assistant to the City Manager Koepke, and City Clerk Hirth

MAYOR'S INSTRUCTIONS

Mayor Abbott asked if there were any additions/deletions to tonight's Agenda. Commissioner Covey asked to add an agenda item entitled Discussion of Employees Over Salary Schedule For Position.

Commissioner Covey moved to approve adding the Request for Discussion of Employees Over Salary Schedule for Position to the Regular Agenda. Commissioner Pelletier seconded the motion.

All ayes

Commissioner Henderson asked that Item #1 on the Consent Agenda be moved to the Regular Agenda. Mayor Abbott asked Commissioner Covey if it would be permissible to combine Item #3 and #4 as one item since they were regarding the same issue. Commissioner Covey stated it was OK with her. There being no other requests, the meeting proceeded.

PUBLIC PARTICIPATION

John L'Heureux, 133 Lauren Lane, Callaway, FL, stated the City seeks organizations to rent the Arts & Conference Center for various functions. He said the more it is utilized the quicker the City can pay off its loan. He said on November 1, 2014, the Harmony Shores Chorus rented the Arts & Conference Center and put on a really good show. He said admission was free but they accepted donations and did collect over the amount required to rent the facility. He said the turnout was good but could have been better. He stated two citizens went to City Hall and were told "no" they could not post a small sign about the event on the windows/counters of City Hall. He asked why they were turned down. He said he could understand if they were selling products, etc. but this was at our facility and he would think we would want participation at events. He said he feels we should allow signs that support our facility. He said they enjoyed performing there and that Cobb Wynn was very helpful with the event. City Clerk Hirth stated in the past they had not allowed anyone except governmental entities to advertise in our City Hall. She continued by saying we only let governmental functions such as Job Fairs, Health Department seminars, etc. to advertise a public event. Mayor Abbott asked City Manager Fuller

DRAFT

do whatever research was necessary to find out if the Commission had adopted something or if this policy is in writing somewhere. He said after they hear from the City Manager they can discuss how they want to proceed. He said he did not know why we could not advertise functions community service type activities on the website and Commissioner Covey stated or the newsletter. He said they needed to be sure there was nothing adopted on this issue before they proceeded.

PRESENTATION

Bay County Sheriff's Office Report for October, 2014 - Lt. Michael Branning

Lt. Branning stated the numbers listed below for the month of October:

20,283 Miles Patrolled	113 Traffic Stops
966 Calls for Service	84 Citations
57 Arrests	40 Traffic Crashes

Mayor Abbott complimented Lt. Branning and his staff regarding the handling of the Veterans Day Parade crowd in a very nice way, a great showing in the parade, and the event was incident-free as far as he knew. He said they were very appreciated.

Commissioner Pelletier stated he had Investigator Bell at his home today because they are apparently having problems in Shadow Bay regarding thefts from vehicles. Lt. Branning said last week they had 4 burglaries on unlocked vehicles and the next night off of Lake Drive they had 3 vehicles burglarized. He stated with the exception of those two nights, they had not seen many burglaries compared to other areas in the County. He said they initially thought it may have been people living in the Shadow Bay area but due to the fact that there were only 4 unlocked cars broken into they thought it was a group of individuals going through a neighborhood checking for unlocked cars. He said they have recovered some of the stolen property but have not made an arrest yet. He said they like to do a lot of field interviews to ask that individuals be aware of what is happening in their neighborhoods regarding people they have not seen there before, a lot of people walking at night, etc. He said they conducted 44 field interview cards last month. He said he emphasizes these and feels they are the single most effective way they have been keeping the burglaries down. Commissioner Pelletier said the moral to the story was to "lock your doors"!

APPROVAL OF MINUTES

Commissioner Covey said before have approval of the minutes she would like to say that City Clerk Hirth did a fantastic job with the minutes and takes copious notes during the meeting. She asked if there wasn't supposed to be some technology that was supposed to help her to do them. Commissioner Pelletier stated she has the software and he just had to figure out his schedule so he could come in and help her. He said the technology is there but it is not user friendly. He said it is on his radar to do.

Commissioner Henderson moved to approve the minutes from the October 28, 2014, Regular Commission Meeting and the Special Meeting minutes from October 16, 2014. Commissioner Hollister seconded the motion.

All ayes

DRAFT

CONSENT AGENDA
None

OLD BUSINESS
None

REGULAR AGENDA
ITEM #1 REQUEST FOR BUDGET TRANSFERS
City Manager Fuller explained the Budget Transfer requests in the agenda packet as well as the handouts that were provided at the meeting. Commissioner Henderson stated she was a little confused about the funds being transferred out of Animal Control because she thought we were given an amount for that contract. City Manager Fuller said it was the amount they budgeted but the exact amount at the end of the year for the past several years it comes in under budget. She also asked if the van had been sold and City Manager Fuller stated it had been sold for approximately $19,000 and it was very close to the cost of the new vehicle for Code Enforcement. Commissioner Covey asked if we had a contract with Animal Control and City Manager Fuller stated we do. City Attorney Obos said they send out quarterly invoices which depend on the number of animals picked up for that quarter so the amount varies. She asked if they were being presumptuous by moving funds from this account. City Manager Fuller said they typically come in under the amount budgeted and Commissioner Covey asked how much. City Manager Fuller stated he did not have that information with him for 2014. Commissioner Covey said when they do a budget they are thinking we have a contract with Bay County for a certain amount of money and that decreasing it this early in the year concerned her. She asked was the amount that was saved last year enough to compensate for this transfer and City Manager Fuller stated he did not have the 2014 information with him. Mayor Abbott said for them to keep these figures in mind regarding what was budgeted and paid last year and the amount budgeted and paid this year to help them with the FY16 budget process. He said the City Manager Fuller needs to give them this information for the next budget year and then it leaves it at the Commission's discretion as to what they budget. Commissioner Covey stated they sold the van for $19,000 and had $15,000 allocated in the budget so why did they need to add another $5,000 to it to buy the vehicle. She stated the van sold for $19,000 so why another $5,000 and Commissioner Henderson told her those were two separate accounts regarding where the money they receive for the van is placed and the amount they have to expend for the cost of the truck. Commissioner Covey asked about decreasing the $20,000 in Regular Salaries for Leisure Services due to the number of vacancies and asked did the $20,000 include benefits. She stated Temporary Workers do not receive benefits and City Manager Fuller said this was strictly money from salaries and benefits are in other line items. Commissioner Covey also questioned the Public Works transfer requests. She asked about the request from the Street Department where he was decreasing the road materials and increasing the Books, Publications, Memberships Dues. She asked wouldn't he have had last year's budget to go by for this line item. City Manager Fuller said it looked like to him that he is trying to pay membership dues and Commissioner Covey asked if this $500 was paid annually. City Manager Fuller said the dues through the City are usually annual dues. She said if last year's budget was used was this in it. City Manager Fuller said PW Director Johnson was not there tonight but Superintendent Martinez was. He asked Superintendent Martinez if he knew anything about the transfers and he stated he did not.

DRAFT

Commissioner Covey said she hated to see this many changes so early in the year. She said that maybe next year there would be more definitive numbers on everything. Mayor Abbott said he thought they would see a steady flow of these because of our new process but said he thought he knew what she was getting at and that all of them need to makes notes throughout the year regarding the increases/decreases so they can see where they should be for the next budget year. Commissioner Pelletier inquired about what were the vacancies in Leisure Services. LS Director Legare said they were Groundskeeper and Grounds Crew Leader. Commissioner Pelletier asked if the requirements went down in the winter months for the Groundskeeper. LS Director Legare stated they have other projects than just the grounds. He said he was going to hold off on filling these two positions until January because he can save some money using temporary personnel.

Commissioner Henderson moved to approve the Requests for Budget Transfers. Commissioner Covey seconded the motion.

All ayes

ITEM #2 AWARD OF BID - CA-2 LIFT STATION REHAB PROJECT

Mayor Abbott asked if everyone had received the additional information passed out tonight and then asked City Manager Fuller to proceed. City Manager Fuller said we have a project to rehab the CA-2 lift station which is located on Gay Avenue south of Wallace Avenue. He said we recently advertised for this project and had five responders. He stated Waddell Plantation, Inc. d/b/a Royal American Construction Group was the lowest responsive bidder at $151,399.00. He said the bids came in a lot higher than anticipated. He said staff recommends the City go with the lowest bidder which was Waddell Plantation, Inc. d/b/a Royal American Construction Group. He stated the City's consulting engineer, Preble-Rish, Inc., represented by Jonathan Sklarski, P.E., distributed additional information for the Commission's review during the discussion of this item. City Manager Fuller stated Preble-Rish did not recommend awarding the additive alternate bid of $19,500.00 due to budget constraints. Mayor Abbott asked how much was budgeted for this item and CM Fuller stated $120,000 was selected and what they will have to do is work with the contractor selected to get the cost as low as possible. He said after we select a contractor he and Mr. Sklarski will work with that contractor to reduce the cost. Mayor Abbott asked what the two figures were for and CM Fuller stated Mr. Sklarski would be able to go into that in detail. Mr. Sklarski stated the typical lift station rehab is between $125,000 to 150,000 and that during the rehab there are a lot of "wants" and "needs" that have to be addressed and the bid received was for all of the "wants" and "needs". He said they will have to look at the itemized list of minimum requirements and then see what, if any, of the extra criteria can be addressed. He said the two figures represent the lump sum cost ($151,399) and then the other amount addressed improvements to the gravel roadway to the lift station, the way storm runoff affects the ditch with sod degradation, asphalt, etc. He stated these items do not affect the actual lift station itself. He continued by saying they can do cost savings by having the City direct purchase some of the larger items, the City can do some of the items regarding the sod work, etc. He said by doing this is saves on the tax but also some of the labor costs. Commissioner Covey asked if there was a reason they did not have a RFP attached to the packet. She said in her research on lift stations, the bids were too generic in detail such as not enough information on the pumps, well liners, control panels, demo valve faults, etc. She stated she would like to see an itemized breakdown. She said she rode around with them right after she became a Commissioner and they were

DRAFT

looking at lift stations. She said it was her understanding they were using only two types of pumps. She asked Mr. Sklarski what type pump was Royal American proposing, was it a U.S. pump and consistent with what they are currently using or was it an inferior pump. Mr. Sklarski responded the name of the pump is Grundfos and Commissioner Covey said that was a European pump, why not stay consistent with the two type pumps we have. Mr. Sklarski stated the pumps are put together in the U.S. but it was correct that is a European company. He said the document specifications had the verbiage stating "or equal". He said the contractor submitted the backup with his selection to prove it was equal to the other two type pumps and after staff (PW Director Johnson and Mr. Sklarski) met and discussed the information provided, they approved the Grundfos pump as an alternative. Commissioner Covey said she personally did not feel comfortable voting on it tonight and would like to see the RFP with an itemized scope of work. She said if the bid was approved it would be $170,399. Mayor Abbott stated they had already said they were not approving the alternate. Commissioner Covey said she wanted to see an actual dollar amount on what's to be approved. City Attorney Obos said until they select/award the bid they cannot negotiate. Commissioner Covey said why would they approve it when they are going with the European pump instead of one of the two they currently use, when they I-C people, who are pretty close to the Royal American bid, and they are quoting on the same pump the City is currently using. Mayor Abbott said the RFP is the guide that they have and it has a statement which says "or approved alternate" and if they provided the information to the engineers and it met the criteria, they have to consider it. Mr. Sklarski stated RFP was mentioned several times. He said the typical process they go through when bidding out a project was to issue an advertisement for bids in the newspaper for anyone interested in bidding on a specific project should contact the City Engineer to pick up specs and plans so they can see the project and possibly place a bid. He stated there was not an RFP. He said to place a bid the contractors use the plans and specifications. Commissioner Covey asked if he was saying there's just a generic bid spec that he gives on any lift station around town and Mr. Sklarski said no, bids are specific for a particular lift station. He said it was not an RFP, it was a set of engineering documents (plans) and a specifications book. Commissioner Covey said she still wanted to see a breakdown on what it will cost. She said there's lots of components to this well and they need to see what they're getting for their money and not having seen the RFP she's not comfortable approving this tonight and then letting him go out and negotiate it down especially when they're talking about two different pumps. She continued by saying all these contractors were from Panama City but this was Waddell Plantation doing business as Royal American. She stated she personally did not feel comfortable with what she had seen and not knowing where they're going with it. She said she would love to see the kind of pump that was part of their bid package because the Flite pump was one that she knew they had. She said she thinks they need to stay consistent with our pumps within the City because if not you're ordering different parts and trying to warehouse them down there. Mr. Sklarski said there could be the opportunity to do a change order to purchase these pumps directly but they have to enter into an agreement with them before they can do this. He stated basically with rehabs there were four major items - pumps, lining system, internal pump and the bi-pass pump which is necessary for shut downs. Commissioner Covey asked how the control panel was affected by this and Mr. Sklarski said it would not be modified in this project. Commissioner Covey said that's the kinds of things she wants to see. She stated there's about 5 wells that need to be rehabilitated and they will all have to have different things done to them and she wants to be educated on these wells so when they get up there to vote on a bid that they will know exactly what's going to be done to these wells.

DRAFT

Mayor Abbott asked how long had he had the information (specs and plans) and Mr. Sklarski stated approximately three months. Mayor Abbott said what Commissioner Covey is trying to say is that she would like to have known this information three months ago so she/they could have reviewed it ahead of time. Commissioner Covey said she'd like for it to be in the agenda packages and was told there were 176 pages. CM Fuller said it was probably his fault that he did not know the level of detail the Commission wanted. Commissioner Covey said she did and she wants to know what's being done. Commissioner Covey asked if this could be made available at City Hall the next time they do one of these and CM Fuller said absolutely and he will let them know it's there via email. He stated for any future projects he will have the specs and plans available in the office. Commissioner Pelletier said he thought when they talked about changing the water meters all these type issues should be brought to them in as much in advance as possible so they are not sitting there being asked to vote on a package they had not seen until a few minutes ago. He asked why did it always have to be last minute. CM Fuller responded that he apologized for any miscommunication but the Commission had never asked for this level of detail on budgeted, routine maintenance of lift stations. Commissioner Pelletier said at the original presentation on the water meters he had asked him then that in the future he was to give this information to them in plenty of time for review. Commissioner Pelletier said this had been sitting around for three months and they should have been told it was coming up on an agenda so they could have reviewed it. Mayor Abbott asked how much was budgeted for this particular lift station project and CM Fuller stated $120,000. Mayor Abbott said with whatever they do tonight, if it goes over budget, he will have to come back and tell them where the funding will be coming from. CM Fuller said he would but they were going to first try to reduce the cost as much as possible. Commissioner Covey said she does not want them using inferior products for example the change in water pumps recommended by Royal American. She stated she then looks at I-C and there was only a $5,000 difference. She asked, down the road, would it cost them more than the $5,000 by cutting it short on this type pump. Mr. Sklarski stated there's the potential to remove the pumps from the contract and purchase them directly. She said she was concerned because he had suggested the low bidder with the different pump. CM Fuller said the pump is an approved alternative. She asked if they had already discussed some things the City could do to cut the cost. Mr. Sklarski said he and PW Director Johnson had already spoken about this and the pumps are a big ticket item on this project. She asked about the bi-pass pump and said our people could do that. Mr. Sklarski said absolutely which is another things that could be removed. Mayor Abbott asked that at this point, if they make a decision tonight to enter into an agreement with Royal American, that Mr. Sklarski comes back to update the Commission on savings, changes, etc. that have been implemented and that way everyone had been informed. CM Fuller asked about the change orders wanting to know if they needed to come back to the Commission and City Attorney Obos said typically not but if it's big ticket items then yes. Mr. Sklarski said in the future they can bid these out however the City chooses and Commissioner Covey said she wants a breakdown. She asked Superintendent Martinez how he felt about having a different type pump and he said he was not going to approve the pump originally but then he received some information that at this time he felt they could use them. He said Public Works is going to re-wire the control panel. CM Fuller said he would provide documents in the future either electronically or let them know they are available in the Commission office for review. Commissioner Pelletier asked City Attorney Obos about when we re-bid the water meters that since they're talking about gutting what we got, wouldn't that constitute a new bid. City Attorney Obos said the City has zero responsive bidders on the water meter issue and we

DRAFT

have five responsive bidders on this project. Commissioner Pelletier said so they can let this contract without going back. City Attorney Obos said they would select a contractor and work with them on the individual issues. He said it was a complete different circumstance and the advertisement said if they (bidder) are the lowest responsive bidder it will be awarded to them. He said because the different pump was approved, there's nothing they can do. Commissioner Hollister asked generally what failed on pumps and Mr. Sklarski said they can replace certain parts within a pump of this size. CM Fuller asked Superintendent Martinez about the Grundfos pump. He said they had talked about it and that it was not necessarily a bad pump but there was just not that much of a presence in this area as the preferred ones and Superintendent Martinez agreed.

Commissioner Henderson moved to accept the lowest responsive bidder, Waddell Plantation, Inc., d/b/a Royal American, for the base bid of $151,399.00 with the understanding that staff and engineering will value engineer some of the items out and get the bid within the budget. Commissioner Pelletier seconded the motion.

Commissioner Covey - aye
Commissioner Henderson - aye
Commissioner Pelletier - nay
Commissioner Hollister aye
Mayor Abbott - aye

Motion passed

ITEM #3 DISCUSSION OF ORDINANCE #600 and ITEM #4 (combined per request)
ITEM #4 FIRST READING - ORDINANCE #947 - GULF POWER CO FRANCHISE AGREEMENT

Mayor Abbott announced these were the two Items together as previously approved. He asked that we start with the First Reading of Ordinance #947 and then they can begin the discussion of both items at the same time. Everyone agreed this was permissible. City Attorney Obos read Ordinance #947 - Gulf Power Company Franchise Agreement by title only. He said it was typical to enter into franchise agreements with major utility companies such as gas and electric. He continued by explaining that Ordinance #600 was approved fifteen years ago and is expiring on December 31, 2014. It was approved at that time with a 15 year term at six percent (6%) rate on their gross receipts. He stated there was no significant change in the content. He said this gives Gulf Power the right to operate in the City's right-of-way. Commissioner Covey said she thought Callaway's charges Gulf Power to use our ROW and then Gulf Power Company passes it on to the citizens on their utility bills. She said they also charge a utility tax for Callaway. City Attorney Obos said the utility tax is the same thing where a tax is charged for electric, gas, bottled gas etc. and is a long-standing revenue source for all cities. He said the Legislature has limited things they allow cities to do for revenue sources and this is one of them. He said the cable companies had the Legislature to change the franchise law so they no longer have to pay for the use of the ROW. Commissioner Covey said the thing she did not like about the agreement is the time period of 15 years. She said she had rather it be for a shorter period of time. City Attorney Obos said that every 3 years up to a maximum number of 5 changes, the percentage

DRAFT

charged can be addressed to either go up or down. CM Fuller said he reviewed other cities and the 15 years/6% is charged in the majority of municipalities.

Commissioner Hollister moved to approve the First Reading - Ordinance #947 - Gulf Power Company Franchise Agreement. Commissioner Henderson seconded the motion.

All ayes

ITEM #5 JOB DESCRIPTION/CLASSIFICATION - PLANNING AND CODE ENFORCEMENT ADMINISTRATOR

CM Fuller stated at the previous meeting staff was requested to bring this job description to the Commission for review of duties and pay schedule. He said this position was funded in this year's budget as well as one Code Enforcement Officer. He said he was recommending this position to be funded at Pay Grade 14 and the salary range was provided in the backup for the agenda. He said he knew this position had been talked about at the Budget Workshops. He said this position will be responsible for not only Code Enforcement duties but daily Planning Department duties as well. Mayor Abbott asked if the pay grade and salary information lined up with the amount budgeted and CM Fuller stated it did. Commissioner Covey asked when he increased each pay grade level didn't the City have to increase their retirement percentage as well to the executive level. She said the reason she asked was because previous CM Collins stated he had raised the former City Manager's retirement status to executive level rather than giving her a pay raise. CM Fuller stated the retirement percentage would not be on an executive level. Commissioner Covey said she was not happy at all with the job description. She stated when they spoke about the position it was her understanding they would have two people working in Code Enforcement and the job description says this position "may" do Code Enforcement. She also said the position is classified as a supervisor and why do they need a supervisor in a two-man department when he, as City Manager and Planning Director will have the oversight of the two positions. She said it appears that this position will have more to do with Planning than with Code Enforcement and one of the things wrong with this town is top heavy administration, too many Chiefs and not enough Indians. She said her sticking point is the "may" do Code Enforcement. CM Fuller said he would change it to shall do Code Enforcement. Commissioner Covey said she would also like for this position to do research on things that he sees we do not have covered with our ordinances and resolutions regarding Code Enforcement. She said for instance having trampolines and bicycles in the front yards being dangerous where other cities do have these ordinances. Commissioner Pelletier said he felt any new suggestions should be put through the Code Enforcement Board prior to coming to the Commission. Commissioner Covey said was he going to leave the position as a supervisor and CM Fuller said he really needed this position to supervise at some level because he (CM Fuller) does not have the time to filter all the work with regard to Code Enforcement - out in the field, in the office, etc. She said he just did not have supervisory experience in the qualifications. CM Fuller said that could be added but it could be any combination of the abilities. CM Fuller said that was why he wanted at least 5 years experience. Mayor Abbott said the criteria required that says ability to research legal records and present ideas effectively in writing or orally would be a key component to address that as well. Commissioner Covey asked what level he was going to bring him in at and CM Fuller said it would have to be within the amount budgeted for covering the two positions. She stated that supposed Mr. Frye applied for the position and he was over the $45,137 then he

DRAFT

would have to be rolled into this job at $45,500 which would be between the middle and the max and CM Fuller stated that was correct.

PUBLIC PARTICIPATION

Wayne McLeod, 501 Beulah Avenue, Callaway, FL, said he would prefer to see this can kicked down the road a little longer. He stated Mr. Frye has been in Code Enforcement for 19 years and during that time Callaway has declined aesthetically. He said he was not placing blame at anyone's feet but knew there were procedures and protocol to be following for code violations. He said there are perennial problems that have not been addressed in 5, 10, 15 years and it's gone from bad to worse. He stated he was not after anyone's job but he's so tire of seeing squalor and raw garbage on the side of the road, vines growing over houses, mattresses on the side of the road, etc. He stated rather than discuss how to clean up the City they are discussing changing jobs. He asked if the second Code Enforcement Officer position be hired to help him (Code Enforcement Officer Frye) without creating a supervisory position. Mayor Abbott said that could have been done but the Board asked the City Manager to create this job description. Mr. McLeod said he had two final comments and said he and other people are not happy with this new position and in due time it may come to pass but asked them to kick the can down the road a little longer. He asked them to do some homework and said couldn't he get help without creating an executive position. Mayor Abbott clarified that it was not an executive position. Commissioner Covey stated the position was created to help with zoning and Planning but did it necessitate a whole new position. CM Fuller stated he felt he needed someone to help oversee the day to day Planning functions but this person would also help with Code Enforcement. Commissioner Covey said it wasn't necessary to approve the position until they get a plan of action or show them something that will show them the need to have the new position. Mayor Abbott said he thought they could clearly vote yes/no tonight. Commissioner Henderson asked wasn't it in the budget workshops where they approved this position and Mayor Abbott said they did. Commissioner Henderson said and now they need to approve the job description. CM Fuller said he needed someone who could be responsible for the day to day Planning and Code Enforcement issues. He stated Bill Frye was gracious enough to have stepped up already to handle a lot of the day to day issues in Planning along and Code Enforcement with zero complaints from him about the extra duties placed on him. Commissioner Covey stated she would like to know who will monitor this position - Code Enforcement and Planning, which there are not zoning issues every day. Mayor Abbott stated CM Fuller would oversee this position and set up job performance measures. Commissioner Covey said she would like to have seen some of those with this information.

Janice Jennings, 7514 Sara Lane, Callaway, FL, said she agreed with Wayne and that she had never seen a two-person office with one supervisor. She stated Bill Frye knows what needs to be done over there and the new person will have a job description. She said Bill went to the Citizens Advisory Committee meeting recently and they learned quite a bit about the procedures, etc. She said they (Code Enforcement) need to do some research on new ordinances to help clean Callaway up and they need to bring someone in to help him.

Jean Champoux, 621 S. Berthe Avenue, Callaway, FL, stated she had been very vocal about the need for another person in the Code Enforcement Office. She said as a member of the Code Enforcement Board, they make decisions on the best information they have and try to make fair

DRAFT

decisions. She said she drives around the City and sees the same squalid mess. She stated after so many years of inactivity in seeking out possible code violations and bringing them to a reasonable conclusion, the task is now overwhelming for one person. She said she was happy they were putting an additional person on but had reservations about the job description and the vision for using the position. She said both Code Enforcement Officers should be doing the same thing and with only two people in the Department. She stated they need to be creative on implementing suggested ways/goals to make Callaway more aesthetically appealing. She said all of these suggested goals should be in tandem and work in partnership together. She said our current Code Enforcement Officer is a capable person with a tough job. She stated he could be much more effective if he and the additional staff member work together with the same duties and responsibilities. She said the current Planning Department should be a part of the Code Enforcement Department's responsibilities with their functions interlinked and it seemed reasonable that the Planning Department avail themselves of these two employees. She said salaries are another issue and the 2015 budget called for a salary amount of $75,501 for both positions. She said her understanding was $30,000 was for the new Code Enforcement Officer. She stated these two figures raise confusion in her mind and in the minds of other citizens but ultimately they need two employees in the Code Enforcement Department with salaries based on experience and job expectations. Both Officers should work together toward the same goal of a better Callaway. She said it's getting worse not better.

John L'Heureux, 133 Lauren Lane, Callaway, FL, said he would like to echo what has already been said and that he agrees with Commissioner Covey and Mr. McLeod. He said he knew that military members know that overnight your responsibilities can go through the roof with no promotion or anything. He stated when he worked with a contractor and they became in charge of the shop it would be working as Leader with a small salary increase. He said he thought that's what they should look at regarding the administrative position.

Dolly Andrew, 5104 Collins Street, Callaway, FL, said she was looking at the job application and in the first paragraph it said work performed independently under the direct supervision of the City Manager with responsibilities of development, review and permitting community development activities. She stated she did not think they needed an administrator or supervisor to supervise one person. She said on the back of the application it said under work environment that work was performed in an office or conference room dealing with occasional field work, walking, etc. She continued by saying it listed duties as some meeting at night. She said this person is going to sit in the office and tell the other person to go out and check on Callaway. She said Bill Frye was a nice guy and had helped her out when she had an issue with a neighbor's tree but he had been here for 17 or 18 years. She said she had to agree with everyone else that Callaway looks like a slum and it's getting disgusting. She stated as far as salaries go, no one has to have a hike in their salary right now and she thought Bill Frye was getting $45,000 or so and had just got a raise. Commissioner Covey said he received one when previous CM Collins was here. Ms. Andrew said you don't get a raise every time and to go from minimum to mid to maximum pay ranges was not right because there were steps between those amounts and you do not have to get $2,000 to 3,000 raises at a time. She asked that they think about it and that there are lots of problems in Callaway but this is a major one.

Commissioner Covey commented that it's being said by some on the Commission that they approved $75,000 in the budget. She said just because it's in the budget doesn't mean it has to be spent. Mayor Abbott agreed.

Commissioner Hollister moved to approve the Planning and Code Enforcement Administrator job description. Commissioner Henderson seconded the motion.

Commissioner Covey - nay
Commissioner Henderson - aye
Commissioner Pelletier - nay
Commissioner Hollister - nay
Mayor Abbott - aye

Motion failed.

City Manager Fuller asked was he not to fill this position and Commissioner Covey said we would like for him to revise the job description. Mayor Abbott asked who "we" were and Commissioner Covey said he liked to ask her that and the pigs say "wee" but she was referring to the folks that got up to speak tonight and herself. She said he needed to have a plan of action and not list it as an administrator. CM Fuller said he would change some of the terminology, take the administrator out and agreed that this position also needed to be in the field working with the new employee on code issues. He said he had made notes and will revise the job description. Mayor Abbott said he had mentioned to previous CM Collins there was a need for a second Code Enforcement Officer and they spoke quite a bit about that issue. He stated what they are trying to do is hold down taxes we're asking citizens to pay because we don't want more on their backs and at the same time we are not going to have a Planning Director to do such things as our EAR amendments, Land Development Regulations, and a variety of other issues that come up besides the day to day functions of Planning with permitting issues, questions from citizens, developers and such. Mayor Abbott continued by saying they can either put these duties onto the Code Enforcement Officer for assistance or hire a Planning Director and have two full-time Code Enforcement Officers but they wanted to do it this way to try to save some money. He said they need to keep in mind that they want a hybrid person who can be out there amongst the code issue but who can also provide some leadership and supervision as well as take care of the required functions of the Planning Department. He said he wants CM Fuller to stay a long time but if not, the next City Manager may not have the background that CM Fuller has. Commissioner Covey stated with all due respect that they hired CM Fuller at an $80,000 salary which took into consideration that he was going to maintain oversight of the Planning Department. Mayor Abbott said that was not what he voted for and others had differing opinions. Commissioner Pelletier said he asked CM Fuller at that time when discussing salary and CM Fuller stated he would still have oversight of that department. Mayor Abbott said he was going to provide the oversight because of his unique background and skills but they needed to remember that they want him, as City Manager, to be in all places at all times developing relationships, trying to lead the City forward. Commissioner Covey said if the next City Manager does not have a Planning background then the salary would be adjusted and Mayor Abbott said he did not know what the future holds. CM Fuller said he would tweak the job description and bring it back to the Commission. He said he would change the "may" to "shall" be out in the field handling Code

DRAFT

Enforcement issues, add research other cities' ordinances to see if there are any that can assist Callaway, change the work environment verbiage and change the name of the position. Commissioner Henderson suggested possibly having a Senior Code Enforcement Officer and a Code Enforcement Officer. Mayor Abbott said they all need to give their input to CM Fuller for revisions to this job description.

ITEM #6 DISCUSSION OF EMPLOYEES OVER SALARY SCHEDULE FOR POSITION

Commissioner Covey said this came to her attention and she did not know how it happened but there were about 10 employees who did not receive a raise because they are at the end of their schedules. She said we had raises where if their salary was $30,000 or less they received a 4% raise, $30,000 or above they received a 3% raise and if no raise at all since 2008 they received a 4% raise. She said she first heard about this from the Fire Department so she asked City Clerk Hirth to find out how many employees fell into the category that they did not receive a raise because they were already at the maximum salary for their schedule. She said these employees should not be penalized and that when she was with the federal government and you were at the top of your schedule you still received a cost of living raise. She said this needed to be rectified because these 10 people did not receive anything and she said they would all qualify for a 4% raise. She said she asked City Clerk Hirth to give her an estimate of what it would cost to give them a raise and it was $16,434.15. She asked if this was in the budget or would they need to go to Reserves. CM Fuller said the Commission would have to vote to do a budget amendment and it would have to come from Reserves. She said she did not understand that they would not get a raise and CM Fuller said it was because it would push them over their pay bracket. She said people should not be penalized if they cannot advance in their bracket. Commissioner Henderson said she feels that until such time as the Commission approves a new pay scale to adjust the pay scale brackets that's the whole reason for having the brackets is that's the maximum you get for that position. Commissioner Covey said with the federal government they have brackets like that but you still receive a cost of living adjustment. Commissioner Henderson stated we are not the federal government. She said they should not make it more complicated than it has to be to give these 10 people raises. Commissioner Henderson said she felt they should not pay people beyond the bracket that the Board has approved. Mayor Abbott asked if Mr. Frye was making more than his bracket and it was stated that he was. He said now that we've been figuratively beating him up for two years because he is beyond his bracket but now we are going to put 10 more people over their bracket. Commissioner Covey said Mr. Frye was not beaten up for being out of his bracket, it was about the way the raise happened. She said he was given a raise, as were others, when they had passed a budget with no raises for anyone. She said when she questioned Marcus about it he told her Mr. Frye received the raise because he was going to change his job description and add Animal Control to it. She said this is totally separate from that. Mayor Abbott said he had fought for employee raises previously and he did not know who these people were but it's difficult for him to say where we have a salary schedule with a maximum amount, that we are going to approve giving raises that put people over that maximum amount. He said he had a hard time with that. Commissioner Hollister asked if we couldn't just change the schedule limits and Mayor Abbott said they could but Commissioner Covey is suggesting giving them one without changing the limits. Commissioner Covey said they are making it more complicated than it is. Mayor Abbott said if they need to adjust the schedules, then adjust the schedules. City Attorney Obos said they could adjust the whole

DRAFT

schedule by whatever percentage they wanted to adjust it to. Commissioner Covey asked what would happen when that person retired/resigned. She said they would be left with the adjusted schedule. CM Fuller said it's been since 2006 since the City had a salary survey and they may want to consider doing one. Mayor Abbott asked CM Fuller to approach the FLC to see if they will do one at no cost. He said he would check with them. Commissioner Covey said she did not care about salary studies, she wants Callaway to pay what we can pay and did not care what anyone else was paying. City Attorney Obos said they could just increase the maximum across the board by a specific percentage. Commissioner Henderson said she was not comfortable doing it when they have already approved a budget and did not want to keep taking funds from the Reserves. Mayor Abbott said he felt the same way because they are not talking about just $16,000, it's $16,000 every single year. He said he would not be in favor of going into Reserves for raises. Commissioner Covey said they just approved $7,500 for the Trolley from the Reserves. Commissioner Covey said she feel those 10 people were slighted in some way. Commissioner Pelletier said they do not know where we are financially because if they remembered, they've only seen one balance sheet since he's been on the Commission. He said he told CM Fuller that he wasn't going to bother him since we have a new Finance Director but maybe once they get a handle on where we are financially this could be addressed. He said he agreed that these people should have been included but with the way the budget process went this year, taking 3 meetings before we knew the number of employees. He said he wished it had been brought up at that time because we left 10 people behind but he said he agreed that the salary schedules would have to be changed since that is what we use as our guide. Mayor Abbott said why didn't they ask CM Fuller to make a 4% adjustment to the top of every salary schedule, bring the number back, show us where it would come from and if it is from Reserves, show them where it will leave the Reserves and then it can come back to the Commission next month for a vote. CM Fuller said there is also the case that some other employees were close to the top of their schedule and may not have received their full 4% increase. Commissioner Pelletier said they would have to look at this again next year if they want to give a raise. He asked if they could look at having a cost of living increase and Commissioner Henderson said it would still have the issue of being at the top of their schedule. Commissioner Covey asked Shelley McKinney to step to the podium because she may have knowledge from a different perspective. Ms. McKinney stated municipal and federal and not similar. She said when you work from a schedule and have a maximum amount and they have to keep in mind that these are reoccurring costs to be budgeted. She said if they want to adjust their bracket by the cost of living this year, then they would need to adjust the bracket next year, etc. by the cost of living. She right now they have to stay within their budgeted bracket amounts but as the Commission they could vote to adjust the brackets by the COL. She said a supervisor cannot recommend a raise that would take an employee out of their bracket unless they change their job title, etc.

COMMISSION COMMENTS

Mayor Abbott stated the Veterans Day Parade was wonderful with a nice crowd of citizens. He said he had received nice feedback from citizens. He said he mentioned to Lt. Branning that they did a great job handling the crowd.

Commissioner Henderson said she had recently joined an organization where she thought our Purchaser may be able to get some receive some training. The name is National Association of Government Purchasers. She stated it did not cost anything to join and their meetings are

DRAFT

through "Got To Meeting" so she can train at her desk. She said she would email the information to CM Fuller. She stated the Board had recently been talking about Charter Officers and Regular Employees, etc. and asked City Attorney Obos if he thought the City Manager and City Clerk should have contracts/agreements. City Attorney Obos stated they didn't need to have a contract and from the Commission's point of view it is better that they do not. Commissioner Covey commented that it was too late for our current City Manager and City Clerk because they are already employed in the positions.

Commissioner Covey thanked Leisure Services Director Legare and his group of employees for their handling of the Veterans Day Parade. She also thanked the employees from the Street Department and the Sheriff's Office. She said everyone did an excellent job and everything looked beautiful. She did say however that our City Manager needed a sign for his truck for the parade. She let everyone know that we are now using In-Mates on our ROW's and they work on every other Saturday. She told LS Director Legare that if we contacted them earlier next year we could possibly get a date other than Saturdays. Commissioner Covey asked LS Director Legare what was the status of the screens for the Commission chambers and he stated he had not had time to get on this project to date. She asked CM Fuller for the status on the Gandy letter and he informed everyone that he had written to Mr. Gandy's lawyer asking that they meet with City staff to see if we can resolve his issues otherwise it can go to the Commission. She asked LS Director Legare if the ICA people had cut our medians and he told her they had cut them last week. He said they missed one island but were good with regard to the litter pickup. She said they are supposed to give us a schedule of when they will be cutting. She stated she will get Mr. Williams' information to CM Fuller and he is to let him know if they miss something. Commissioner Covey said the mediation is still ongoing with AWT and hopefully there will be a resolution by the end of the month.

City Attorney Obos stated he will be getting two ordinances and two resolutions on the next agenda for the Nuisance Abatement issue.

CM Fuller informed everyone that sidewalks are planned for both sides of Star Avenue between Highway 22 and Cherry Street. He said public information workshop will be held on November 24, 2014 at the Fire Department. He stated he had a pdf copy of 60% plans and will forward them to the Commission. He said the on-line billing will go live on November 19, 2014. He stated postcards will be sent to all customers making them aware of this option.

ANNOUNCEMENTS

- Employees Thanksgiving Luncheon - Thursday, November 13, 2014, City Offices would be closed from 11:30 AM-1:30 PM - A&CC
- Code Enforcement Board Meeting - Thursday, November 20, 2014, 4:00 P.M. - A&CC
- Christmas Tree Lighting Ceremony - Thursday, December 4, 2014, 6:00 P.M. - A&CC
- Next Regular Commission Meeting - Tuesday, December 9, 2014, 6:00 P.M. - A&CC

There being no further business, Commissioner Hollister moved to adjourn the meeting which was seconded by Commissioner Henderson at 8:15 P.M.

_____

Sandra B. Hirth, City Clerk

DRAFT

City of Callaway Board of Commissioners
Agenda Item Summary

December 9, 2014

Resolution #14-23 – Intent to set a Public Hearing

1. PLACED ON AGENDA BY:

J. Michael Fuller, City Manager

2. AGENDA:

PRESENTATION ☐
PUBLIC HEARING ☐
CONSENT ☒
REGULAR ☐

3. IS THIS ITEM BUDGETED (IF APPLICABLE)?: *YES* ☐ *NO* ☐

N/A

4. BACKGROUND: (WHY, WHAT, WHO, WHERE, WHEN, HOW, & IDENTIFY ALL ATTACHMENTS)

If adopted, Resolution #14-23 states the City Commission's intent to set a public hearing to consider a resolution electing to utilize the uniform method of collecting non-ad valorem assessments.

Attachments

- Resolution #14-23

5. REQUESTED MOTION/ACTION:

Staff recommends that the Commission approve Resolution 14-23 setting the public hearing for January 13, 2014 at 6:00pm.

RESOLUTION NO.14-23

A RESOLUTION CALLING FOR PUBLIC HEARING ON A RESOLUTION OF THE CITY COMMISSION OF THE CITY OF CALLAWAY, FLORIDA, ELECTING TO USE THE UNIFORM METHOD OF COLLECTING ONE OR MORE SERIES OF NON-AD VALOREM ASSESSMENTS FOR MORE THAN ONE YEAR LEVIED IN CALLAWAY, FLORIDA; AND PROVIDING FOR AN IMMEDIATELY EFFECTIVE DATE.

BE IT RESOLVED BY THE CITY COMMISSION OF CALLAWAY, FLORIDA, AS FOLLOWS:

SECTION 1. AUTHORITY. This Resolution of the City of Callaway, Florida (the "City") is adopted pursuant to Chapter 197, Florida Statutes, and other applicable provisions of law.

SECTION 2. FINDINGS. It is hereby ascertained, determined, and deemed as follows:

(A) Prior to using the uniform method of collecting non-ad valorem assessments to levy and collect special assessments in Callaway, Florida, Section 197.3632 of the Florida Statutes requires the City Commission of the City of Callaway (the "City Commission") to adopt at a public hearing a resolution stating the City's intent to use the uniform method of collecting said assessments and to publish a notice of the City's intent to use said method weekly in a newspaper of general circulation within Bay County, Florida, for four (4) consecutive weeks preceding the public hearing.

(B) The City Commission hereby documents its intent to consider the use of the uniform method of collecting one or more series of assessments at a public hearing to be held on January 13, 2015.

SECTION 3. PUBLIC HEARING; NOTICE.

(A) A public hearing shall be held by the City Commission on January 13, 2015, at 6:00 p.m., at the City Commission's regular meeting at the Callaway Arts & Conference Center located at 500 Callaway Park Way, Callaway, Florida, at which public hearing all parties in interest and citizens may appear to be heard as to any and all matters pertinent to a resolution of the City Commission electing to use the uniform method of collecting one or more series of non-ad valorem assessments for more than one year.

(B) A notice describing the time, date, place, and purpose of the public hearing, and a description of the area subject to said assessments shall be published on or about December 19, 2014, December 26, 2014, January 2, 2015, and January 9, 2015, in accordance with Section 197.3632, Florida Statutes. Such notice shall be in substantially the form attached hereto as Appendix "A".

SECTION 4. EFFECTIVE DATE. This Resolution shall take effect immediately upon its adoption.

[Remainder of page intentionally left blank.]

DULY ADOPTEDthis 9thday ofDecember, 2014.

CITY COMMISSION OF THECITY OFCALLAWAY, FLORIDA

(SEAL)

_____

Thomas W. Abbott, Mayor

Attest:

_____

Sandra B. Hirth, City Clerk

APPENDIX A
FORM OF PUBLISHED NOTICE

NOTICE OF INTENT TO USE UNIFORM METHOD OF COLLECTING NON-AD VALOREM ASSESSMENTS

The City Commission of the City of Callaway, Florida (the "Commission") hereby provides notice, pursuant to Section 197.3632(3)(a), Florida Statutes, of its intent to use the uniform method of collecting special assessments, sometimes called non-ad valorem special assessments, to be levied upon one or more properties within the City of Callaway upon which a public nuisance is located, to recover the cost of capital improvements and essential services incurred by the City to abate the nuisance in the event the owners or persons interested in the property fail to do so, commencing for the Fiscal Year beginning on October 1, 2014. The Commission will consider the adoption of a resolution electing to use the uniform method of collecting such assessment(s) on the same bill as for property taxes as authorized by Section 197.3632, Florida Statutes, at a public hearing to be held at 6:00 o'clock p.m., Tuesday, January 13, 2015, in the Commission Chambers, Callaway Arts & Conference Center, 500 Callaway Park Way, Callaway, Florida. Such resolution will state the need for the levy and will contain a legal description of the boundaries of the real property subject to the levy.

The real property subject to the levy is all the property located within the boundaries of the City of Callaway, Florida. The levy will only be made upon a property upon which a public nuisance is located, not abated by the owner after notice and opportunity for hearing, and abated by the City as provided by law. The levy against the property upon which the nuisance is or was located will not exceed the cost of abatement and benefit, as determined by law, necessary to relieve and address the burdens created by such nuisance.

Copies of the proposed form of resolution, which contains the legal description of the real property subject to the levy, are on file at the Office of the City Clerk of Callaway, 6601 East Highway 22, Callaway, Florida. All interested persons are invited to attend.

The public hearing is only being held to determine and preserve the method of collection.

In the event any person decides to appeal any decision by the City Commission with respect to any matter relating to the consideration of the resolution at the above-referenced public hearing, a record of the proceeding may be needed and in such an event, such person may need to ensure that a verbatim record of the public hearing is made, which record includes the testimony and evidence on which the appeal is to be based. In accordance with the Americans with Disabilities Act, persons needing a special accommodation or an interpreter to participate in this proceeding should contact the City Clerk's Office at (850) 871-6000 at least seven days prior to the date of the hearing.

DATED this 9th day of December, 2014.

By Order of: CLERK OF THE CITY OF CALLAWAY

Publication: December 19, 2014
December 26, 2014
January 2, 2015
January 9, 2015

City of Callaway Board of Commissioners
Agenda Item Summary

December 9, 2014

Baywinds Subdivision Final Plat Approval

1. PLACED ON AGENDA BY:

J. Michael Fuller, City Manager

2. AGENDA:

PRESENTATION ☐
PUBLIC HEARING ☐
CONSENT ☒
OLD BUSINESS ☐
REGULAR ☐

3. IS THIS ITEM BUDGETED (IF APPLICABLE)?: YES ☐ NO ☐

N/A

4. BACKGROUND: (WHY, WHAT, WHO, WHERE, WHEN, HOW, & IDENTIFY ALL ATTACHMENTS)

The property owner and applicant, Mr. Tony Layne of Blountstown, FL, has requested the Callaway City Commission to approve the Final Plat for the project known as the Baywinds Subdivision. The Baywinds Subdivision Final Plat has been reviewed by the City's staff and surveyor for conformance with the Land Development Regulations (LDR), Comprehensive Plan, and applicable Florida Statutes. The City's surveyor has certified that the Final Plat complies with Chapter 177, F.S. The City Planning Department confirms that the Final Plat meets all applicable City rules and regulations, including conformance with the subdivision standards in Section 15. 745 of the LDR. Please reference the enclosed staff summary report for additional information.

ATTACHMENT:

- Staff Summary Report
- Planning Board Recommendation
- Baywinds Subdivision Final Plat

5. REQUESTED MOTION/ACTION:

Staff recommends that the City Commission approved the Final Plat for the Baywinds Subdivision and accept the cash bond for sidewalk improvements.

CITY OF CALLAWAY
DEPARTMENT OF PLANNING/CODE ENFORCEMENT
STAFF SUMMARY REPORT

BAYWINDS SUBDIVISON FINAL PLAT APPROVAL December 9, 2014

Applicant: Mr. Tony Layne
20757 NE CR 69A
Blountstown, Florida

Project: Baywinds Subdivision
To be located at 6604 Boat Race Road, Callaway, FL
Parcel #07286-000-000

BACKGROUND & SUMMARY:

The property owner and applicant, Mr. Tony Layne of Blountstown, FL, has requested to Callaway City Commission to approve the Final Plat for the project known as the Baywinds Subdivision. The project is located at 6604 Boat Race Road, Callaway, FL near the intersection of Boat Race Road and Katherine Avenue. The subject property is approximately 3.40+/- acres, zoned R-6M (single family residential) and has an underlying future land use designation of Low Density Residential. A legal description more particularly describing the property can be found on the Baywind Subdivision Plat (enclosed).

The City of Callaway issued a Development Order on April 28, 2010 after the Preliminary Plat was approved by the Callaway Planning Board. The Planning Board reviewed and approved the preliminary plat on April 20, 2010. A copy of the Planning Board recommendation is enclosed. Next, Mr. Layne began construction of a twelve (12) lot in accordance with the Development Order.

FINDINGS:

The Baywinds Subdivision Final Plat has been reviewed by the City's staff and surveyor for conformance with the Land Development Regulations (LDR), Comprehensive Plan, and applicable Florida Statutes. The City's surveyor has certified that the Final Plat complies with Chapter 177, F.S. The City Planning Department confirms that the Final Plat meets all applicable City rules and regulations, including conformance with the subdivision standards in Section 15. 745 of the LDR. The applicant has submitted a cash bond in accordance with Section 15.610 of the LDR for sidewalk improvements in the amount of $6,000.00. The Final Plat and supporting documents have been reviewed by the City Attorney's Office for statutory and legal conformity. An as-built survey and certification of the subdivision improvements have been completed and submitted to the City.

The applicant, Mr. Layne, has complied with all requirements and standards for a single family residential subdivision in the City of Callaway.

RECOMMENDED ACTION:

Staff recommends that the City Commission approved the Final Plat for the Baywinds Subdivision and accept the cash bond for sidewalk improvements in the amount of $6,000.00 to be held in an escrow or trust account.

J. MICHAEL FULLER, AICP
CITY MANAGER &
ACTING PLANNING DIRECTOR

PLANNING BOARD RECOMMENDATION

Recommendation on the Preliminary Plat – Baywinds Subdivision – Parcel # 07286-000-000. 6604 Boat Race Rd. Callaway FL. Tony Layne

Date: April 20, 2010

Planning Board Recommendation:

The Planning Board hereby recommends a transmittal of **approval** to the City Commission on the Preliminary Plat – Baywinds Subdivision – Parcel # 07286-000-000. 6604 Boat Race Rd. Callaway, FL. Tony Lanye.

Contingencies:_____

Alfred Schuller, Chairman

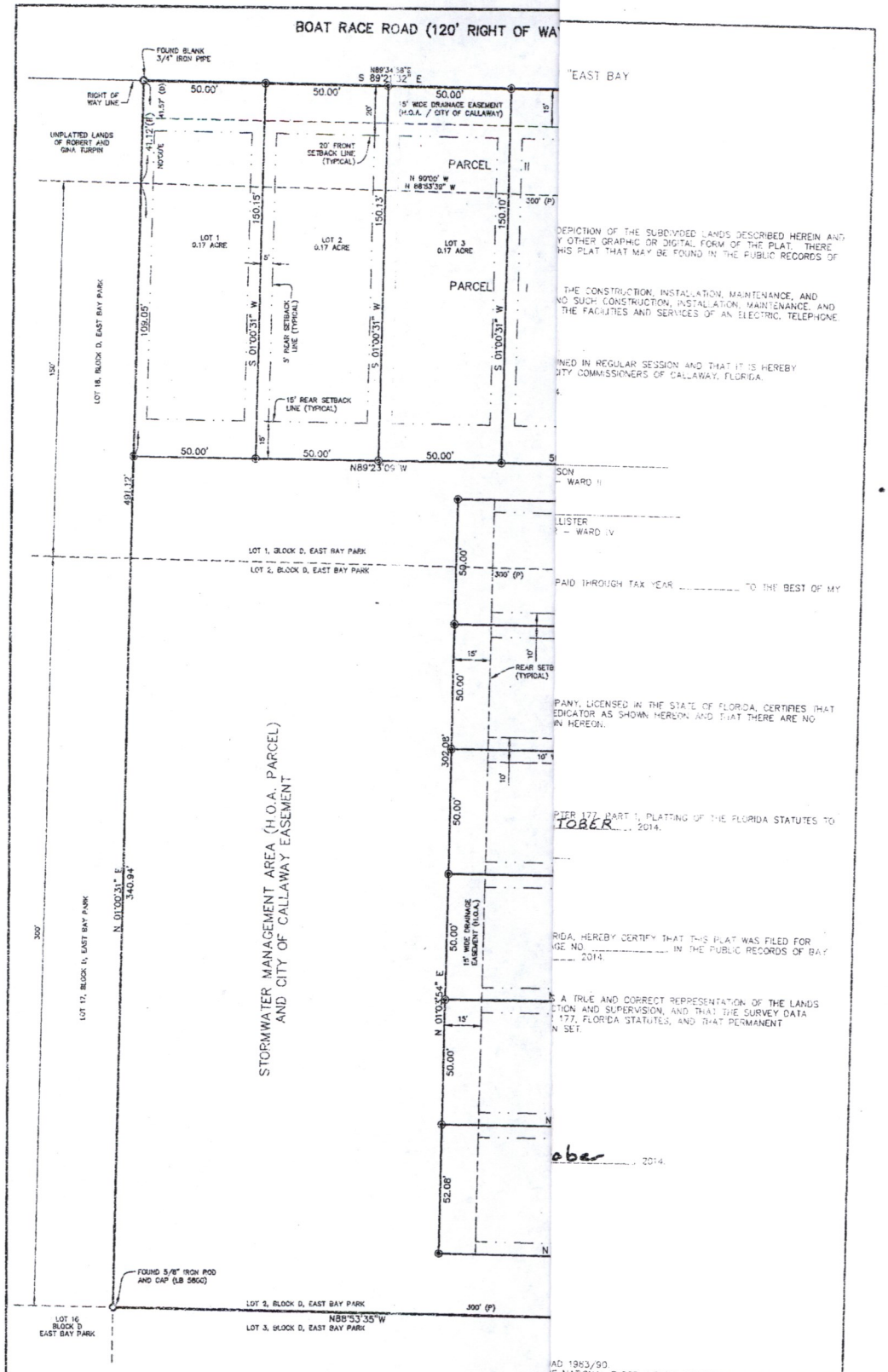
BOAT RACE ROAD (120' RIGHT OF WA
FOUND BLANK 3/4" IRON PIPE
N89°34'58"E
S 89°21'32" E
50.00'
50.00'
50.00'
15' WIDE DRAINAGE EASEMENT (H.O.A. / CITY OF CALLAWAY)
RIGHT OF WAY LINE
UNPLATTED LANDS OF ROBERT AND GINA TURPIN
N0°00'E
20' FRONT SETBACK LINE (TYPICAL)
PARCEL
N 90°00' W
N 88°53'39" W
300' (P)
LOT 1 0.17 ACRE
LOT 2 0.17 ACRE
LOT 3 0.17 ACRE
150.15'
150.13'
150.10'
109.05'
S 01°00'31" W
5' REAR SETBACK LINE (TYPICAL)
15' REAR SETBACK LINE (TYPICAL)
LOT 18, BLOCK D, EAST BAY PARK
150'
50.00'
50.00'
50.00'
N89°23'09" W
491.17'
LOT 1, BLOCK D, EAST BAY PARK
LOT 2, BLOCK D, EAST BAY PARK
50.00'
300' (P)
15'
REAR SETB (TYPICAL)
50.00'
302.08'
10'
50.00'
STORMWATER MANAGEMENT AREA (H.O.A. PARCEL) AND CITY OF CALLAWAY EASEMENT
N 01°00'31" E
340.94'
300'
LOT 17, BLOCK D, EAST BAY PARK
50.00'
15' WIDE DRAINAGE EASEMENT (H.O.A.)
N 01°00'54" E
15'
50.00'
52.08'
FOUND 5/8" IRON ROD AND CAP (LB 5800)
LOT 2, BLOCK D, EAST BAY PARK
300' (P)
N88°53'35"W
LOT 3, BLOCK D, EAST BAY PARK
LOT 16 BLOCK D EAST BAY PARK
"EAST BAY
DEPICTION OF THE SUBDIVIDED LANDS DESCRIBED HEREIN AND
Y OTHER GRAPHIC OR DIGITAL FORM OF THE PLAT. THERE
HIS PLAT THAT MAY BE FOUND IN THE PUBLIC RECORDS OF
THE CONSTRUCTION, INSTALLATION, MAINTENANCE, AND
NO SUCH CONSTRUCTION, INSTALLATION, MAINTENANCE, AND
THE FACILITIES AND SERVICES OF AN ELECTRIC, TELEPHONE
NED IN REGULAR SESSION AND THAT IT IS HEREBY
ITY COMMISSIONERS OF CALLAWAY, FLORIDA.
SON
– WARD II
LLISTER
– WARD IV
PAID THROUGH TAX YEAR _____ TO THE BEST OF MY
PANY, LICENSED IN THE STATE OF FLORIDA, CERTIFIES THAT
EDICATOR AS SHOWN HEREON, AND THAT THERE ARE NO
N HEREON.
PTER 177, PART 1, PLATTING OF THE FLORIDA STATUTES TO
TOBER, 2014.
RIDA, HEREBY CERTIFY THAT THIS PLAT WAS FILED FOR
GE NO _____ IN THE PUBLIC RECORDS OF BAY
_____, 2014.
S A TRUE AND CORRECT REPRESENTATION OF THE LANDS
CTION AND SUPERVISION, AND THAT THE SURVEY DATA
177, FLORIDA STATUTES, AND THAT PERMANENT
N SET.
ober, 2014.
AD 1983/90.
E NATIONAL FLOOD INSURANCE PROGRAM, FLOOD INSURANCE
DATE: JUNE 02, 2009.
LEGEND:
HIC SCALE
60
120
FEET)
= 30 ft.

CASH BOND

KNOW ALL BY THESE PRESENTS: that TONY LAYNE, whose address is 20757 NE CR 69A, Blountstown, Florida, as Principal, himself, his heirs, executors, administrators, successors and assigns, jointly and severally, is held and firmly bound unto THE CITY OF CALLAWAY, FLORIDA, whose address is 6601 East Highway 22, Callaway, Florida, as Obligee, for the use and benefit of claimants as defined below, by filing with the Obligee this cash bond and the attached cashier's check or money order in the amount of Six Thousand Dollars ($6,000.00).

NOW THEREFORE, THE CONDITION OF THIS OBLIGATION is such that Principal shall promptly complete the sidewalk project contemplated as part of the Baywinds subdivision development, pursuant to City Development Order issued [_____], which together with all supporting documentation associated therewith being made a part of this bond by reference, at the times, under the conditions, and in the manner prescribed in the permit/contract, all as required for Principal=s receipt of a certificate of occupancy, and under which Principal is required to furnish to the City a performance bond in the sum equal to the improvement costs; and the bond is therefore in the amount of $6,000.00 which equals the estimated cost.

If Principal faithfully and accurately executes the above-mentioned obligations, and complies with all of its Development Order=s terms and conditions, then this obligation shall be void; otherwise it shall remain in full force and effect. If Principal fails to meet the above-mentioned obligations, the Obligee may forfeit this bond and apply it to complete said obligations.

Signed, sealed and delivered
in the presence of:

TONY LAYNE, PRINCIPAL

_____
(Signature of Witness)
Print Name:

By:_____(SEAL)

Date:

_____
(Signature of Witness)

CASH BOND

KNOW ALL BY THESE PRESENTS: that TONY LAYNE, whose address is 20757 NE CR 69A, Blountstown, Florida, as Principal, himself, his heirs, executors, administrators, successors and assigns, jointly and severally, is held and firmly bound unto THE CITY OF CALLAWAY, FLORIDA, whose address is 6601 East Highway 22, Callaway, Florida, as Obligee, for the use and benefit of claimants as defined below, by filing with the Obligee this cash bond and the attached cashier's check or money order in the amount of Six Thousand Dollars ($6,000.00).

NOW THEREFORE, THE CONDITION OF THIS OBLIGATION is such that Principal shall promptly complete the sidewalk project contemplated as part of the Baywinds subdivision development, pursuant to City Development Order issued April 28, 2010, which together with all supporting documentation associated therewith being made a part of this bond by reference, at the times, under the conditions, and in the manner prescribed in the permit/contract, all as required for Principal's receipt of a certificate of occupancy, and under which Principal is required to furnish to the City a performance bond in the sum equal to the improvement costs; and the bond is therefore in the amount of $6,000.00 which equals the estimated cost.

If Principal faithfully and accurately executes the above-mentioned obligations, and complies with all of its Development Order's terms and conditions, then this obligation shall be void; otherwise it shall remain in full force and effect. If Principal fails to meet the above-mentioned obligations, the Obligee may forfeit this bond and apply it to complete said obligations.

Signed, sealed and delivered
in the presence of:

TONY LAYNE, PRINCIPAL

_____
(Signature of Witness)
Print Name:

By:_____(SEAL)

Date:_____

_____
(Signature of Witness)

DRAFT

City of Callaway Board of Commissioners
Agenda Item Summary

December 9, 2014

Planning & Code Enforcement Department Staffing and Contractual Services

1. *PLACED ON AGENDA BY:*

J. Michael Fuller, City Manager

2. *AGENDA:*

PRESENTATION ☐
PUBLIC HEARING ☐
CONSENT ☐
OLD BUSINESS ☒
REGULAR ☐

3. *IS THIS ITEM BUDGETED (IF APPLICABLE)?:* YES ☐ NO ☐

N/A

4. *BACKGROUND:* (*WHY, WHAT, WHO, WHERE, WHEN, HOW, & IDENTIFY ALL ATTACHMENTS*)

At the past meetings, the Commission has discussed new staffing options and other recommendations from the City Manager regarding planning services. A copy of the City Manager's recommendations presented during the last budget workshop are attached. Recently, staff was instructed to provide the job and salary details for the new position that will be tasked with planning and code enforcement duties. Recommended changes from the Commission have been incorporated in the new job description and titled "Zoning & Code Enforcement Officer." A redlined/strike-through version of the job description is attached. It is recommended that the new position to be classified at Pay Grade 14. The salary range is as follows:

	Min	Mid	Max
Annual	33,425	45,137	56,823
Hourly	16.07	21.70	27.32

Concurrently, the City Manager is requesting the Commission consider Request for Qualifications (RFQ) for a continuing professional planning services contract. Limited funding was allocated in the FY 15 budget for a planning consultant on an as needed basis. A copy of the RFQ is attached. A proposed planning services contract is intended to be a time saving device for City staff to augment in areas where the planning tasks or projects are complex or large in scale.

This RFQ and the Zoning & Code Enforcement Officer position were included in FY15 Budget, as well as one existing code enforcement officer position.

Attachments

- Memo from City Manager dated Aug 2014
- Redlined Draft of Zoning & Code Enforcement Officer Job Description
- Draft of RFQ

5. *REQUESTED MOTION/ACTION:*

Staff recommends the Commission approve the classification of the new job position and authorize the City Manager to advertise the RFQ for Planning Services.

CITY OF CALLAWAY, FLORIDA
CITY HALL
6601 East Highway 22, Callaway, FL 32404
Phone 850-871-6000 • FAX 850-871-2444
www.cityofcallaway.com

Mayor
Thomas W. Abbott

Commissioners
Melba Covey
Pamn Henderson
Bob Pelletier
Ralph L. Hollister

MEMORANDUM

DATE: August 4, 2014

TO: Commissioner Melba Covey
Commissioner Pamn Henderson
Commissioner Bob Pelletier
Commissioner Ralph Hollister
Mayor Thomas Abbott

FROM: Michael Fuller, City Manager JMF

CC: Bill Frye, Code Enforcement
Trish Johnson, Human Resources
Debra Yeager, Finance Department

RE: Planning & Code Enforcement Department Staffing

On July 22, 2014 you appointed me as city manager and tasked me to come up with a solution to address the vacancy created in the Planning and Code Enforcement Department. As you know, I previously oversaw the operation of this department as the Director. Some of the major responsibilities of the department include city planning, zoning, code enforcement, development order reviews and approvals, floodplain management, community redevelopment, and economic development. The Department also oversees contractual work for GIS/mapping, animal control, and building permitting and inspections. I have assessed past, current, and future needs of the department while giving special attention to the service it provides to the City of Callaway. It has been noted that the city desires to increase and improve code enforcement action throughout our neighborhoods and communities. Achieving a superior level of service in the areas of zoning and code enforcement and land use planning activities was my primary concern when considering all possible solutions.

I propose that the responsibilities and tasks of the department be addressed by utilizing available resources, restructuring personnel, and through contractual services. This will insure that these areas of concern, including those in need of improvement, are addressed in the most cost effective manner. In fact, the city will realize an immediate savings in personnel costs. I believe it helps minimize long term personnel and operating costs of the department. As a result, I am proposing an alternative to hiring another director at this time.

Below I have outlined my recommendations to address the needs of the Planning and Code Enforcement Department:

Recommendation #1 - Established a Zoning & Code Enforcement Officer or Administrator Position. This considers existing resources and personnel, and will address immediate and future needs.

The incumbent will be responsible for administrating the city's code of ordinances, land development regulations, zoning codes, and coordinate all efforts of the Planning Board and Code Enforcement Board. The responsibility and supervision of all code enforcement activities will be a major function of this position. He/she will oversee the contractual services provided for animal control, GIS/mapping, and building permitting and inspections. Community redevelopment activities, such as facade improvement and demolition grants, will also be administered by the incumbent. This type of position is common in local governments that give focus on zoning and land use with enforcement of municipal codes. (If approved, I would extend this position to a current employee who is ideally qualified and capable of this type of work. He is currently assisting me in a variety of planning and zoning duties, and I believe retains a wealth of knowledge in areas directly related to this position.)

Recommendation #2 - Retain the Code Enforcement Officer Position. Retaining this position along with Recommendation #1 will allow the department to provide a superior level of service in the area of code enforcement. Improvement in this area has been a concern of some citizens and elected officials. Having two staff members with code enforcement knowledge and expertise will provide the best solution. This position will work under the direction and supervision of the Zoning/Code Enf. Administrator. (If these recommendations are approved, I would interview and hire someone outside of current staff and who has knowledge and experience in code enforcement.)

Recommendation #3 - Contractual Services for Comprehensive Planning and Complex Projects. It is probable that there may be a need to address complex planning tasks or projects. Providing limited funding for a planning consultant will address this. Currently, there are no major project that can't be managed in-house. However, consideration must be given to potential large scale development projects and statutory mandates, such as the Evaluation and Appraisal Report (or EAR) to the Comprehensive Plan. Many consultants have experience in this type of work and would be suited to assist the city as these projects arise.

Recommendation #4 - The City Manager's Priorities. There are certain tasks that I promoted and implemented while I was Director. Economic development, intergovernmental coordination (regarding schools, military base, regional and county organizations), and budgeting capital improvement planning are priorities that I will continue to oversee as City Manager. My particular background in municipal planning would complement the services provided by the department. These tasks would not present a burden on the City Manager's Office at this time and into the foreseeable years to come.

These recommendations will allow the city to address all functions of the Planning and Code Enforcement Department while keeping costs at a minimum. I have attached the proposed costs to be included in the draft budget for FY15. As shown, with the inclusion of funding for planning services, the overall personnel and contractual costs will not exceed $122,500 (plus the cost of a second truck). I have include the related costs from the past five (5) years in order to illustrate what the city has traditionally spent for these services. Please note, there are sufficient unused funds in the Department budget (from director vacancy) that would allow us to begin implementing these recommendations in the current fiscal year.

I want the Department to take a proactive approach to the issues that lay ahead. I am excited about providing a better level of service to the City of Callaway.

REDLINED Draft for Dec 9 Meeting

Department of Planning/Code Enforment

Zoning & Code Enforcement Officer

Salary Grade: 14
Department: Planning Department
Reports to: City Manager Date:

Summary

The Zoning & Code Enforcement Officer provides technical work and oversight in the areas of planning, zoning, and code enforcement. ~~The incumbent~~This position is responsible for administering and enforcing of the Code of Ordinances, Land Development Regulations, and zoning regulations, and is responsible for the oversight the code enforcement personnel. Responsibility for development permitting, redevelopment activity and neighborhood preservation is required. ~~The incumbent~~This position will serve liaison/coordinator for the Planning Board, Board of Adjustment, and Code Enforcement Board. ~~Work is performed independently under the direction of the City Manager, and will include field assignments and administrative tasks.~~

Essential Duties and Responsibilities

The duties listed below are ~~intended only as illustrations~~the duties and responsibilities of the Zoning & Code Enforcement Officer. Although various types of work ~~performed. The~~are preformed, the omission of specific duties does not exclude them from the position if the work is similar, related, or a logical assignment to the position.

- ~~Oversees code enforcement personnel, including training, guidance and direction on work assignments.~~
- ~~Oversees~~Responsible for code enforcement policies and procedures to include complaints/violations, investigation, compliance, and conflict resolution.
- Shall patrol/search areas of the city including public right-of-ways, commercial, residential, and vacant properties for ordinance violation or part of routine activity.
- Responsible for code enforcement operations, including directing assignments, tasks, and personnel.
- ~~Attends~~Attend meetings of outside agencies and organizations where pertinent.
- ~~Reviews~~Review all types of development permit applications and submits for processing and final review where appropriate.
- Monitors approved and projected development plans and construction to assure compliance with City codes and supplements, zoning ordinances, environmental laws and development programs and projects.
- Shall coordinate the city's ~~community redevelopment~~Community Redevelopment Agency and neighborhood revitalization activities and plans.
- Prepares reports, agendas and minutes, including recommendations and supporting data for approval and submission to the Code Enforcement Board, City Commission, Building Department and Advisory Boards. Prepares changes/additions to city zoning/land use ordinances and Comprehensive Plan.

- ~~Provides~~Researches and provides information to property owners, investors, real estate developers and other interested parties on planning procedures, land use applications, ordinances, and codes.
- Administers service agreements/contracts with Bay County for ~~GIS~~Geographic Information System, animal control, addressing & numbering, and others.
- ~~Updates City documents, codes, and maps as necessary. Researches and provides recommended changes/additions to Code Enforcement Policy Manual.~~
- Performs other duties as assigned.

Knowledge, Skills and Abilities:

- Knowledge of research methods and ability to compile and analyze original data.
- Thorough working knowledge of city ordinances, code enforcement policies, and Florida Statues.
- Knowledge of City of Callaway Comprehensive Growth Development Plan and the City of Callaway Land Development Regulations.
- Knowledge of the Community Redevelopment Agency and redevelopment/revitalization plans.
- Ability to ~~respond to~~communicate with the public regarding complaints and ~~monitor areas for~~ code enforcement violations.
- Ability to establish and maintain effective working relations with advisory board members, other government agencies, contractors, business owners, homeowners, and the general public.
- Ability to prepare concise, well supported, and effective reports.
- Ability to use investigative techniques and procedures.
- Ability to interpret and enforce pertinent codes, ordinance and resolutions.
- Ability to research legal records and present ideas effectively, both orally and in writing.
- Ability to read and interpret maps, surveys, architectural plans, and civil/site plans.
- Ability to use ~~GIS systems~~Geographic Information Systems.
- Ability to use office equipment, including computers, copier, printer, digital camera, etc.

Minimum Qualifications:

- Minimum five (5) years related experience and/or training in planning, zoning, code enforcement, or related fields; or equivalent combination of education and experience.
- Associates degree from two-year accredited college in criminal justice, public administration, or closely related field is preferred.
- Florida Association of Code Enforcement (FACE) certification is preferred.
- Valid Florida driver's license~~.~~,
- Computer skills, including ArcReader GIS, Word, Excel, Photoshop or equivalent. Must be computer literate.
- Must be able to write/type correspondence, including report and notices, using correct English.

Physical Demands:

The physical demands described here are representative of those that must be met by an employee to successfully perform the essential functions of this job. Reasonable accommodations may be made to enable individuals with disabilities to perform the essential functions.

Work requires some exertion such as climbing, walking over rough surfaces and loose materials, crouching, bending, stooping and reaching; and lifting light to moderately heavy items. Work requires average physical agility and dexterity.

~~**Work Environment:**~~

~~Work is performed in an office setting and fieldwork outside driving a vehicle and walking, occasionally in adverse weather conditions. Duties require some meetings at night.~~

CITY OF CALLAWAY
REQUEST FOR QUALIFICATIONS: PROFESSIONAL PLANNING SERVICES

The City of Callaway is requesting the submittal of statements of qualification from interested planning professionals or firms for a Continuing Professional Planning Services Contract until 5:00 p.m., CDT, on Friday, January 20, 2015, to complete any or all of the following types of services on an as needed basis:

- Initiating and conducting public workshops/charettes
- Community, neighborhood and comprehensive planning
- Collecting and evaluating data and analysis
- Preparing textual revisions and essential narratives for the Comprehensive Plan and Land Development Regulations
- Developing and preparing overlay districts
- Analyzing growth and development patterns
- Preparing the Evaluation and Appraisal Report amendments
- Review of the County's Comprehensive Plan, Land Development Regulations to recommend revisions and updates
- Implementing and maintaining Community Redevelopment Agency Plans and Budgets
- Perform ancillary services as required

This contract is intended to be a time saving device for City staff to augment in areas where specific expertise is not available or where workload will not permit timely accomplishment of budgeted projects. This contract will allow the City to solicit proposals directly from the consultant for each project or task. The City, at any time, reserves the right to solicit separate proposals for any and all projects or tasks. Selection by the City as a consultant does not guarantee that the consultant will be called on a regular basis during the contract term, nor does it guarantee a minimum level of compensation with respect to volume of work or fees. Work will be awarded to consultants on an as needed basis and based on consultant's current workload or availability, expertise in the project area, and previous work awarded. The City reserves the right to select firms based solely on the content of the qualifications that are received. The City reserves the right to reject any and all bids. All firms meeting the minimum qualifications will be placed on the City's consultant list. Responses will be evaluated with the following criteria:

- Qualifications of firm, staff, and consultants
- Previous Comprehensive Planning and Land Development Regulation experience in North Florida
- Reputation of client references
- Understanding and familiarity of the City's Comprehensive Plan and Land Development Regulations
- Claims and litigation history

Published: *The News Herald*
on Dec. ____, 2104

City of Callaway Board of Commissioners
Agenda Item Summary

December 9, 2014

Adjustment to Pay Grades/Employees at Max Pay Range

1. PLACED ON AGENDA BY:

J. Michael Fuller, City Manager

2. AGENDA:

PRESENTATION ☐
PUBLIC HEARING ☐
CONSENT ☐
OLD BUSINESS ☒
REGULAR ☐

3. IS THIS ITEM BUDGETED (IF APPLICABLE)?: YES ☐ NO ☒

Item is not included in the FY15 budget – Projected increase is $15,532.00.

4. BACKGROUND: (WHY, WHAT, WHO, WHERE, WHEN, HOW, & IDENTIFY ALL ATTACHMENTS)

At the previous Commission meeting, Commissioner Covey requested the City consider providing a raise for certain employees who had reach the maximum of their pay grade. These employees had not received a raise in the FY15 budget because it would place them out or further out of maximum pay. The Board discussed adjusting the Pay Grade Schedule and requested staff to research a possible adjustment to the schedule.

Staff has researched several ways of increasing the maximum range of the pay grade schedule giving consideration to cost of living adjustments (COLA) as determined annual by Social Security Admin (SSA). Three scenarios have been presented, including 1) adjust max per COLA from 2007 to 2014, 2) adjust max at 8.25%, and 3) adjusting max by adding $5000.00.

Staff is recommending the Commission raise the maximums of all pay grades (25 grades) by $5,000.00. This appears to be the most equitable way of adjusting the grades. Please note that this recommendation would only adjust the pay grade schedule, not raising an individual employee's salary. The flat, onetime adjustment of $5000 would accommodate future pay raises budgeted by the Commission.

In order to provide a pay raise to the 11 employees at the max or outside their pay range, the Commission must vote to extend pay raises to these employees and amend the FY15 budget. Staff projects that increase will cost approximately $15,532 and be moved from Reserves. Please see the attached table for addition information and a breakdown of cost per Fund.

ATTACHMENT:

- Tables of proposed maximums and budget increase

5. REQUESTED MOTION/ACTION:

Staff recommends an increase to the maximums of all pay grades by $5,000.00 each and authorize an annual adjustment of the pay grades per COLA. In addition, an amendment to the FY15 budget in the amount of $15,532 is needed to provide a pay increase to employees at or above their pay grade max.

Max Adjusted per COLA from 2007 to 2014

Pay Grade	Grade Max.	increase 18.2%	New Grade Max.
1	23,586	4,293	27,879
2	25,237	4,593	29,830
3	27,003	4,915	31,918
4	28,893	5,259	34,152
5	30,916	5,627	36,543
6	33,080	6,021	39,101
7	35,396	6,442	41,838
8	37,874	6,893	44,767
9	40,526	7,376	47,902
10	43362	7891	51253
11	46,398	8,444	54,842
12	49,645	9,035	58,680
13	53,120	9,668	62,788
14	56,823	10,342	67,165
15	60,819	11,069	71,888
16	65,076	11,844	76,920
17	69,630	12,673	82,303
18	74,506	13,560	88,066
19	79,722	14,509	94,231
20	85,303	15,525	100,828
21	91,273	16,612	107,885
22	93,701	17,054	110,755
23	104,499	19,019	123,518
24	111,814	20,350	132,164
25	119,643	21,775	141,418

Max Adjusted 8.25% to Allow Most Employ within Pay Grade

Pay Grade	Grade Max.	increase 8.25%	New Grade Max.
1	23,586	1,946	25,532
2	25,237	2,082	27,319
3	27,003	2,228	29,231
4	28,893	2,384	31,277
5	30,916	2,551	33,467
6	33,080	2,729	35,809
7	35,396	2,920	38,316
8	37,874	3,125	40,999
9	40,526	3,343	43,869
10	43362	3577	46939
11	46,398	3,828	50,226
12	49,645	4,096	53,741
13	53,120	4,382	57,502
14	56,823	4,688	61,511
15	60,819	5,018	65,837
16	65,076	5,369	70,445
17	69,630	5,744	75,374
18	74,506	6,147	80,653
19	79,722	6,577	86,299
20	85,303	7,037	92,340
21	91,273	7,530	98,803
22	93,701	7,730	101,431
23	104,499	8,621	113,120
24	111,814	9,225	121,039
25	119,643	9,871	129,514

Max Adjusted by adding $5000 to all grades

Pay Grade	Grade Max.	increase $5000	New Grade Max.
1	23,586	5,000	28,586
2	25,237	5,000	30,237
3	27,003	5,000	32,003
4	28,893	5,000	33,893
5	30,916	5,000	35,916
6	33,080	5,000	38,080
7	35,396	5,000	40,396
8	37,874	5,000	42,874
9	40,526	5,000	45,526
10	43362	5000	48362
11	46,398	5,000	51,398
12	49,645	5,000	54,645
13	53,120	5,000	58,120
14	56,823	5,000	61,823
15	60,819	5,000	65,819
16	65,076	5,000	70,076
17	69,630	5,000	74,630
18	74,506	5,000	79,506
19	79,722	5,000	84,722
20	85,303	5,000	90,303
21	91,273	5,000	96,273
22	93,701	5,000	98,701
23	104,499	5,000	109,499
24	111,814	5,000	116,814
25	119,643	5,000	124,643

Costs of Increases to Employees at Top of Pay Scale

#	Dept		Employee Name	Position Title	Pay Grade	Date Last Pay Increase	Date Hired	10/1/15 Hourly Rate	Current Salary	Rate Increase	Annual Base Wages @ new rates	Increase in Base Wages	FY 2015 Increase AS OF 1/1/2015	Soc Sec 6.2%	Medicare 1.45%	Retirement at FY15 Rates	Total FY 2015 Budget Increase Required
1	533	Water	Bishop Johnny R	Maint Worker III	7		4/26/1984	18.46	36,920	1.04	38,397	1,477	1,136	70	16	140	1,362
1	534	Solid Waste	Dohanyos Robert	Equip Oper I Solid W	6		4/28/1997	17.05	34,091	1.04	35,455	1,364	1,049	65	15	83	1,212
1	535	Sewer	Franklin John P.	Foreman-Lift Station	10		2/5/1996	22.47	44,949	1.04	46,747	1,798	1,383	86	20	109	1,598
0.45	535	Sewer	Hopper Jeffery W (45%)	Utility Svc Tech	6		3/10/1995	17.52	15,766	1.04	16,397	631	485	30	7	38	560
0.55	533	Water	Hopper Jeffery W (55%)	Utility Svc Tech	6		3/10/1995	17.53	19,282	1.04	20,053	771	593	37	9	47	685
1	535	Sewer	Lundy Patrick K	Utility Foreman	10		Resigned 12/26/2014										
1	541	Street	McKinney John A	Equip Oper II-Street	7		6/28/1995	18.18	36,358	1.04	37,813	1,454	1,119	69	16	88	1,292
1	549	Maint(Shop)	Phillips Preston D	Supv. Maint Shop	12	0.00537	12/2/2002	24.69	49,644	1.03463	51,363	1,719	1,322	82	19	104	1,528
1	541	Street	Piercy Robert E	Foreman-Streets	10		4/27/1987	23.45	46,904	1.04	48,780	1,876	1,443	89	21	114	1,667
1	534	Solid Waste	Puckett, Ronald J	Equip Oper II-Solid W	7	0.0051	6/30/1995	17.61	35,394	1.0349	36,629	1,235	950	59	14	75	1,098
1	522	Fire	Schroeder Daniel	Fire Driver/Engineer	10		6/12/1986	16.67	44,291	1.04	46,063	1,772	1,363	84	20	270	1,737
1	535	Sewer	Simpler Donald R.	Utility Svc Tech	7		8/28/1995	17.94	37,315	1.04	38,808	1,493	1,148	71	17	141	1,377
1	541	Street	Turner Gregory A	Equip Oper III-Stree	8		5/28/1987	19.91	39,811	1.04	41,404	1,592	1,225	76	18	96	1,415
									Total FY 2015 Budget Increase			17,182	13,217	819	192	1,304	15,532
									Increase by Fund		General Fund						7,639
											Water						

	2,048
Sewer	3,535
Solid Waste	2,309

Automatic COLA*:

Month-Year	COLA %
January-07	3.3
January-08	2.3
January-09	5.8
January-10	0.0
January-11	0.0
January-12	3.6
January-13	1.7
January-14	1.5
	18.2

**per US Social Security Admin*

ATTACHMENT II B

GRADE AND SALARY PROPOSED STRUCTURE
CITY OF CALLAWAY
JANUARY 1, 2007

Salary Grade	Grade Minimum	Grade Midpoint	Grade Maximum	Midpoint Progression	Range Spread
01	$13,874	$18,730	$ 23,586	N/A	70.0%
02	$14,845	$20,041	$ 25,237	7.0%	70.0%
03	$15,884	$21,444	$ 27,003	7.0%	70.0%
04	$16,996	$22,945	$ 28,893	7.0%	70.0%
05	$18,186	$24,551	$ 30,916	7.0%	70.0%
06	$19,459	$26,270	$ 33,080	7.0%	70.0%
07	$20,821	$28,109	$ 35,396	7.0%	70.0%
08	$22,279	$30,077	$ 37,874	7.0%	70.0%
09	$23,839	$32,182	$ 40,526	7.0%	70.0%
10	$25,507	$34,435	$ 43,362	7.0%	70.0%
11	$27,293	$36,845	$ 46,398	7.0%	70.0%
12	$29,203	$39,424	$ 49,645	7.0%	70.0%
13	$31,247	$42,184	$ 53,120	7.0%	70.0%
14	$33,425	$45,137	$ 56,823	7.0%	70.0%
15	$35,776	$48,297	$ 60,819	7.0%	70.0%
16	$38,280	$51,678	$ 65,076	7.0%	70.0%
17	$40,959	$55,295	$ 69,630	7.0%	70.0%
18	$43,827	$59,166	$ 74,506	7.0%	70.0%
19	$46,895	$63,308	$ 79,722	7.0%	70.0%
20	$50,178	$67,740	$ 85,303	7.0%	70.0%
21	$53,690	$72,482	$ 91,273	7.0%	70.0%
22	$55,118	$77,556	$ 93,701	7.0%	70.0%
23	$61,470	$82,985	$104,499	7.0%	70.0%
24	$65,773	$88,794	$111,814	7.0%	70.0%
25	$70,378	$95,010	$119,643	7.0%	70.0%

City of Callaway Board of Commissioners
Agenda Item Summary

December 9, 2014

CA-2 Rehab Final Revisions to Contract with Royal American Construction

1. PLACED ON AGENDA BY:

J. Michael Fuller, City Manager

2. AGENDA:

- PRESENTATION ☐
- PUBLIC HEARING ☐
- CONSENT ☐
- OLD BUSINESS ☒
- REGULAR ☐

3. IS THIS ITEM BUDGETED (IF APPLICABLE)?: YES ☒ NO ☐

4. BACKGROUND: (WHY, WHAT, WHO, WHERE, WHEN, HOW, & IDENTIFY ALL ATTACHMENTS)

As discussed at the last commission meeting, city staff met with Royal American who submitted the lowest responsive bid. To reduce project costs, the contract has been revised allowing the city to purchase replacement pumps. Public Works staff will also demolish the current valve vault and provide materials for the driveway to further reduce the costs and maintain the original budget amounts. After removing these items and making adjustments to the original project scope, the new price for CA-2 Rehab is $114,774.

- Piping and Install - $90,199
- Bypass Pumping - $5,000
- Wet Well Lining - $19,575

There is a potential tax savings on pipe materials of $1,350, if the City does a tax saving agreement. Staff will research this once the project has commenced.

ATTACHMENT:

- Revised Contract
- Copies Pump Specs.

5. REQUESTED MOTION/ACTION:

Recommend approval of the revised contract and award to Royal American Construction.

SECTION 00050
AGREEMENT

This Agreement, made this _____ day of _____ 2014, by and between, City of Callaway hereinafter called "OWNER" and __Royal American Construction Group_____doing business as __corporation_____, hereinafter called "CONTRACTOR."

WITNESSETH: That for and in consideration of the payments and agreements herein after mentioned:

A. The CONTRACTOR will commence and complete construction of the **City of Callaway – Lift Station CA-2 Improvements.**

B. The CONTRACTOR will furnish all of the materials, supplies, tools, equipment, labor, and other services necessary for the construction and completion of the Project described herein.

C. The CONTRACTOR will commence the Work required by the Contract Documents within 10 calendar days after the date of the Notice to Proceed and will substantially complete the Project within **90** consecutive calendar days and fully complete the Project within **30** days thereafter, unless the period for completion is otherwise extended by the Contract Documents. Liquidated damages for failure to fully complete the Project within the specified time will be set at **$250.00** per day.

D. The CONTRACTOR agrees to perform all of the Work described in the Contract Documents and comply with the terms therein for the sum of __One hundred fourteen thousand seven hundred seventy-four and 00/100----------_____ Dollars ($_____114,774.00_____) or as shown in the Bid.

E. The term "CONTRACT DOCUMENTS" means and includes the following:

1. ADVERTISEMENT FOR BIDS (SECTION 00010)
2. INFORMATION FOR BIDDERS (SECTION 00020)
3. BID (SECTION 00030)
4. AGREEMENT (SECTION 00050)
5. PERFORMANCE BOND (SECTION 00060)
6. PAYMENT BOND (SECTION 00070)
7. NOTICE OF AWARD (SECTION 00080)
8. NOTICE TO PROCEED (SECTION 00090)
9. APPLICATION FOR PAYMENT (SECTION 00096)
10. CHANGE ORDER (SECTION 00097)

11. GENERAL CONDITIONS (SECTION 00100)

12. PUBLIC ENTITY CRIMES STATEMENT (SECTION 00262)

13. ANTI-COLLUSION STATEMENT (SECTION 00302)

14. CONFLICT OF INTEREST (SECTION 00303)

15. DRUG-FREE WORKPLACE STATEMENT (SECTION 00304)

16. SUBMITTALS (SECTION 01340)

17. PROJECT CLOSEOUT (SECTION 01705)

18. PLANS prepared by Preble-Rish, Inc.

19. ADDENDA

No.____1_____, dated ___October 16____, 2014

No.____2_____, dated ___October 23____, 2014

No._____, dated _____, 2014

No._____, dated _____, 2014

No._____, dated _____, 2014

F. The OWNER will pay to the CONTRACTOR in the manner and at such times as set forth in the General Conditions such amounts as required by the Contract Documents.

G. This Agreement shall be binding upon all parties hereto and their respective heirs, executors, administrators, successors, and assigns.

(REMAINDER OF PAGE INTENTIONALLY LEFT BLANK)

IN WITNESS WHEREOF, the parties hereto have executed or caused to be executed by their duly authorized official, this Agreement in **three** copies each of which shall be deemed an original on the date first written above.

(SEAL)

ATTEST:

BY _____
(Signature)

NAME_____
(Please Type)

TITLE_____

OWNER

CITY OF CALLAWAY

BY _____
(Signature)

NAME Michael Fuller

TITLE City Manager

(SEAL)

ATTEST:

BY_____
(Signature)

NAME_____
(Please Type)

TITLE_____

CONTRACTOR

BY _____
(Signature)

NAME Joey Chapman
(Please Type)

TITLE Vice-President

ADDRESS: 1002 W. 23rd Street, Ste. 400

Panama City, FL 32405

_____

Employer Identification Number _____

END OF SECTION

SECTION 00080
NOTICE OF AWARD

TO: Royal American Construction Group

PROJECT DESCRIPTION:

CITY OF CALLAWAY
LIFT STATION CA-2 IMPROVEMENTS

The OWNER has considered the Bid submitted by you for the above-described Work in response to its Advertisement for Bids dated October 30, 2014, and Information for Bidders.

You are hereby notified that your Bid has been accepted for items Lump Sum Bid in the amount of One hundred fourteen thousand seven hundred seventy-four and 00/100---------- ($ 114,774.00) as stated in the Information for Bidders, you are required to execute the Agreement and furnish the required CONTRACTOR's Performance Bond, Payment Bond, and certificates of insurance within 10 calendar days from the date you receive this Notice of Award.

If you fail to execute said Agreement and furnish said Bonds within 10 calendar days from the date of this Notice of Award, said OWNER will be entitled to consider all your rights arising out of the OWNER's acceptance of your Bid as abandoned and as a forfeiture of your Bid Bond. The OWNER will be entitled to such other rights as may be granted by law.

You are required to return an acknowledged copy of this Notice of Award to the OWNER.

Dated this _____ day of _____, 2014.

CITY OF CALLAWAY, FLORIDA

By: _____

Title: Michael Fuller, City Manager

ACCEPTANCE OF NOTICE

Receipt of the above NOTICE OF AWARD is hereby acknowledged

By: Royal American Construction Group (Company Name).

This the _____ day of _____, 2014

By: Joey Chapman (Print and Sign Name).

Title: Vice-President.

END OF SECTION

AAG ELECTRIC MOTORS & PUMPS, INC

2340 Industrial Dr Panama City, FL 32405
Phone: 850-763-9386 Fax 850-785-8545
brian@aagpumps.com
www.aagpumps.com

PROPOSAL No. 11172014BJ – REV Pumps Only DATE: 11/18/2014

PROPOSAL NAME: Callaway CA-2 Improvements LOCATION: City of Callaway

REPRESENTATIVE: AAG CONTACT: Brian D. Justice

Quantity Two (2) WILO model No. FA15.66E+FKT27.1-4/22KEx, 6" pumps, each to deliver 800 GPM at 95' TDH and complete with 40' of power cable and control cable and base elbows. Motor to be oil filled with cooling system, 40 H.P., and operate on 460 Volts, 3 Phase, 60 Hertz power supply. The pump motor shall be Class F insulation, NEMA B design, for wet pit installation.

OPTIONS & ACCESSORIES INCLUDED:

2 - 6" Discharge Base Elbow, Coupling

CLARIFICATIONS & COMMENTS:

Only the items listed are included in this proposal. SCADA, junction boxes, conduit, wiring, piping, valves, fittings, vents, gauges, concrete structures, guide rails including upper brackets, lifting arrangements, level sensors, cable holder, wetwell access hatch and installation labor are specifically excluded.

WILO offers a limited five (5) year municipal warranty. A copy is included herewith and is considered part of this proposal. **The first two (2) years of the five (5) year warranty period will be 100%.**

START-UP SUPERVISION: This proposal includes the services of a factory-authorized supervisor for (1) day. Additional time will be charged at $750 per day plus expenses.

A field engineer will be provided at start-up in a supervisory capacity only. Any and all costs associated with labor, set-up, etc., for the tests are to be by the contractor.

Total price, F.O.B. shipping point, freight allowed to jobsite in contiguous 48 U.S. states, **$37,021.28** plus any Federal, State or Local Taxes which may apply. Quoted price and delivery good for (45) days. (For other conditions, refer to attached).

Estimated delivery: **6 to 8** weeks based on receipt in our office of acceptable order and complete approval of submittal data, if required. Freight allowed to job site. Two (2) operation and maintenance manuals per WILO standard format included.

AAG ELECTRIC MOTORS & PUMPS, INC

2340 Industrial Dr Panama City, FL 32405
Phone: 850-763-9386 Fax 850-785-8545
brian@aagpumps.com
www.aagpumps.com

We will be providing to the contractor, Two (2) operation and maintenance manuals per WILO standards. If this is not correct, we must be notified by the time of the engineer's approval of submittal data.

TERMS: 100% due and payable 30 days from date of each invoice, subject to continuing approval of credit. Payment of this invoice is in no way contingent upon payment by others. In event any amount becomes past due, buyer agrees to pay seller a fee of 1 1/2% of unpaid balance each month until paid, at the highest legal rate allowed by law, whichever is lower, plus all costs of collection including reasonable attorney's fees. Failure to pay in accordance with terms voids all warranties and no service or start-up will be authorized until account is paid in full including service fee and collection costs.

ACCEPTED THIS ___ DAY OF_____

_____

_____
NAME OF PURCHASER

SUBMITTED THIS **18th** DAY OF **November**

2014

Brian D. Justice
AAG REPRESENTATIVE

ACCEPTED THIS _____ DAY OF _____ 20___

SELLER: AAG ELECTRIC MOTORS & PUMPS, INC. BY: _____

2340 Industrial Dr Panama City, FL 32405
Phone: 850-763-9386 Fax 850-785-8545
brian@aagpumps.com
www.aagpumps.com

Standard Terms of Sale

1. Applicable Terms. These terms govern the purchase and sale of the equipment and related services, if any (collectively, "Equipment"), referred to in Seller's purchase order, quotation, proposal or acknowledgment, as the case may be ("Seller's Documentation"). Whether these terms are included in an offer or an acceptance by Seller, such offer or acceptance is conditioned on Buyer's assent to these terms. Seller rejects all additional or different terms in any of Buyer's forms or documents.

2. Payment. Buyer shall pay Seller the full purchase price as set forth in Seller's Documentation. Unless Seller's Documentation provides otherwise, freight, storage, insurance and all taxes, duties or other governmental charges relating to the Equipment shall be paid by Buyer. If Seller is required to pay any such charges, Buyer shall immediately reimburse Seller. All payments are due within 30 days after receipt of invoice. Buyer shall be charged the lower of 1 ½% interest per month or the maximum legal rate on all amounts not received by the due date and shall pay all of Seller's reasonable costs (including attorneys' fees) of collecting amounts due but unpaid. All orders are subject to credit approval.

3. Delivery. Delivery of the Equipment shall be in material compliance with the schedule in Seller's Documentation. Unless Seller's Documentation provides otherwise, Delivery terms are F.O.B. Seller's facility.

4. Ownership of Materials. All devices, designs (including drawings, plans and specifications), estimates, prices, notes, electronic data and other documents or information prepared or disclosed by Seller, and all related intellectual property rights, shall remain Seller's property. Seller grants Buyer a non-exclusive, non-transferable license to use any such material solely for Buyer's use of the Equipment. Buyer shall not disclose any such material to third parties without Seller's prior written consent.

5. Changes. Seller shall not implement any changes in the scope of work described in Seller's Documentation unless Buyer and Seller agree in writing to the details of the change and any resulting price, schedule or other contractual modifications. This includes any changes necessitated by a change in applicable law occurring after the effective date of any contract including these terms.

6. Warranty. Subject to the following sentence, Seller warrants to Buyer that the Equipment shall materially conform to the description in Seller's Documentation and shall be free from defects in material and workmanship. The foregoing warranty shall not apply to any Equipment that is specified or otherwise demanded by Buyer and is not manufactured or selected by Seller, as to which (i) Seller hereby assigns to Buyer, to the extent assignable, any warranties made to Seller and (ii) Seller shall have no other liability to Buyer under warranty, tort or any other legal theory. If Buyer gives Seller prompt written notice of breach of this warranty within 18 months from delivery or 1 year from acceptance, whichever occurs first (the "Warranty Period"), Seller shall, at its sole option and as Buyer's sole remedy, repair or replace the subject parts or refund the purchase price therefor. If Seller determines that any claimed breach is not, in fact, covered by this warranty, Buyer shall pay Seller its then customary charges for any repair or replacement made by Seller. Seller's warranty is conditioned on Buyer's (a) operating and maintaining the Equipment in accordance with Seller's instructions, (b) not making any unauthorized repairs or alterations, and (c) not being in default of any payment obligation to Seller. Seller's warranty does not cover damage caused by chemical action or abrasive material, misuse or improper installation (unless installed by Seller). THE WARRANTIES SET FORTH IN THIS SECTION ARE SELLER'S SOLE AND EXCLUSIVE WARRANTIES AND ARE SUBJECT TO SECTION 10 BELOW. SELLER MAKES NO OTHER WARRANTIES OF ANY KIND, EXPRESS OR IMPLIED, INCLUDING WITHOUT LIMITATION, ANY WARRANTY OF MERCHANTABILITY OR FITNESS FOR PURPOSE.

7. Indemnity. Seller shall indemnify, defend and hold Buyer harmless from any claim, cause of action or liability incurred by Buyer as a result of third party claims for personal injury, death or damage to tangible property, to the extent caused by Seller's negligence. Seller and settle any indemnified claim. Seller's indemnification is conditioned on Buyer (a) promptly, within the Warranty Period, notifying Seller of any claim, and (b) providing reasonable cooperation in the defense of any claim. shall have the sole authority to direct the defense of and settle any indemnified claim. Seller's indemnification is conditioned on Buyer (a) promptly, within the Warranty Period, notifying Seller of any claim, and (b) providing reasonable cooperation in the defense of any claim.

2340 Industrial Dr Panama City, FL 32405
Phone: 850-763-9386 Fax 850-785-8545
brian@aagpumps.com
www.aagpumps.com

WILO 5 YEAR LIMITED WARRANTY

WILO WATER MANAGEMENT

LIMITED WARRANTY FOR WILO FA PUMPS

ONE-YEAR WARRANTY FOR CERTAIN ANCILLARY EQUIPMENT

EXCEPT AS EXPRESSLY PROVIDED HEREIN, WILO USA LLC MAKES NO REPRESENTATION OR WARRANTY OF ANY KIND, EXPRESSED OR IMPLIED, WITH RESPECT TO ANY PRODUCTS, PARTS OR SERVICES PROVIDED BY WILO USA LLC INCLUDING, BUT NOT LIMITED TO, THE IMPLIED WARRANTIES OF MERCHANTABILITY AND FITNESS FOR A PARTICULAR PURPOSE, APPLICATION OR USE.

LENGTH AND SCOPE OF WARRANTY

WILO USA LLC offers the below limited Warranty against defects in materials and workmanship, for WILO FA Model pumps used in permanent installations in accordance with and subject to all requirements of WILO installation and operation instructions, when such installations are operated under normal conditions pumping wastewater at ambient temperature. Normal conditions specifically include a maximum of 15 equipment starts per hour on constant speed installations or unlimited pump starts per hour on soft start or variable speed installations. Pumps that handle abrasive and/or corrosive liquids are not covered by this warranty unless specifically agreed to, and approved in writing by WILO USA LLC. FA pumps are warranted only for the original application and specific hydraulic conditions.

Motors, electrical control boxes and all other items other than WILO pumps furnished by WILO USA LLC are covered by a Limited Warranty for a period of one (1) year from date of commissioning, or six (6) months after shipment, and are subject to all of the conditions, limitations, and requirements stated herein.

The warranty period starts at either commissioning or six (6) months after shipment, whichever comes first. Commissioning is defined to be the day that the unit is put into service and start up is completed.

OBLIGATIONS OF WILO

WILO USA LLC's sole obligation shall be to either repair, modify or replace, at its sole discretion, (a) a defective municipal use FA pump which is received by WILO within five (5) years or a defective industrial use FA pump which is received by WILO within two (2) years after the start of the warranty period that (b) has been inspected by WILO to confirm the existence of a defect.

Municipal and industrial use pumps received within one (1) year of the start of the warranty period shall be repaired at no charge. Municipal pumps received in years two through five (2-5), and Industrial use pumps received in year two (2) of the warranty period shall be repaired at a cost of fifty percent (50%) of the then-current WILO listed sale price for parts and listed price for labor.

FA pumps shipped to WILO for warranty service must be shipped prepaid to WILO, or a WILO Authorized Service Center. Repaired pumps shall be returned to the purchaser freight collect. Electrical Schematics and start-up reports satisfactory to WILO are required from purchaser prior to consideration of any claim under this Limited Warranty.

Commissioning and initial start-up of WILO Model FA Pumps shall be performed by WILO or a WILO Authorized Service Center, and a written start-up report shall be generated by WILO. A copy of the start-up report shall be made available to the purchaser. Should a WILO Model FA Pump require a repair during the warranty period, WILO, or a WILO Authorized Service Center, shall provide re-commissioning of the repaired pump at no charge to the purchaser and issue a new start-up report. Operation of a WILO Model FA pump without an approved start-up shall make any warranty from WILO null and void without written permission from an officer of the company of WILO.

2340 Industrial Dr Panama City, FL 32405
Phone: 850-763-9386 Fax 850-785-8545
brian@aagpumps.com
www.aagpumps.com

OBLIGATIONS OF PURCHASER

The purchaser shall register their WILO Model FA www.wilosales.com/register pump(s) no later than at commissioning and start-up. Non-registered pumps shall only be warranted for one year from shipment. Registration information provided to WILO will be confidential and not released to any entity except for the purchaser and as needed to WILO's authorized service providers.

The purchaser is responsible for all freight and rigging charges for removing pumps from service and delivery of the pumps to and from a WILO Authorized Service Center. The purchaser is responsible for all repair costs that are deemed to be outside of the scope of WILO's warranty. The purchaser should inspect all shipments/deliveries upon receipt. Damaged products should not be accepted, or signed for as "damaged" on the original bill of lading. WILO must be notified immediately of any shipments which were damaged. Upon receipt of delivery from WILO you have a period of 48hrs to declare any missing material listed on the BOL but not received. After this period WILO USA cannot be responsible for claims of missing items after this time.

The purchaser shall connect all WILO provided motor sensors to the control system. Motor sensor control circuitry must be operational at start-up, and at all times.

WILO requires any application using variable frequency drives to use load side filters where power cable lengths are in excess of 50 feet.

EXCLUSIONS AND EXCEPTIONS

This Limited Warranty excludes damage or wear to products caused by misapplication of product, improper maintenance, accident, abuse, unauthorized alteration or repair, Acts of God, or installation or operation that is non-compliant with WILO installation and operation instructions.

This Limited Warranty excludes normal wear and tear of wear rings, impellers, volutes and heat exchangers and other consumable parts and does not cover any failure caused by lightning, single-phasing, incorrect voltage, other defects or interruptions in the power supply or by splicing the electrical cable between the pump control panel and the pumps.

This Limited Warranty shall only apply to the type of WILO pumps described above, and shall not apply to any WILO pumps, electrical control equipment, or other items furnished which have been repaired by anyone other than WILO or a WILO Authorized Service Center.

H2OUSE

JIM HOUSE & ASSOCIATES, INC.
Environmental Water Process & Pumping Equipment

HOME OFFICE
1401 Georgia Road, Irondale, AL 35210
P.O. Box 101957
(205) 592-6302 (800) 292-6335
FAX: (205) 951-0291

Since 1957

November 17, 2014

GULF COAST OFFICE
24312 Highway 98, Fairhope, AL 36532
P.O. Box 1330 (36533)
(251) 928-7867 (800) 919-7867
FAX: (251) 928-7804

TO: CONTRACTORS

City of Callaway
Oscar Martinez

QUOTE NO: 2780

PROJECT: CA-2 Lift Station Rehabilitation

LOCATION: Callaway, FL

ENGINEER: Preble-Rish, Inc.

BID DATE: 11/17/2014

For your consideration in bidding this project, we are pleased to offer herewith our unpriced quotation for equipment and/or services.

The equipment and/or services offered in this quotation are subject to the approval of the Engineer and to our standard "Terms and Conditions" of sale, as attached.

Only those items specifically mentioned in this quotation are included.

Freight allowed prices, when quoted, include least expensive freight to the nearest curb stop or RR siding to the job site. Charges for special packing and crating, handling, unloading, demurrage, special carrier, etc. are not included.

Field services, that may be required in addition to that specifically included in the quotation, may be provided at the "per diem" rate shown in the "Terms and Conditions".

Delivery times stated in the quotation represent our best estimate of the time required to manufacture and ship after receipt of final approval and release to manufacture.

PRICE DATA FOR THIS QUOTATION TO FOLLOW:

(COVER SHEET)

Jim House & Associates, Inc - Quote Details November 17, 2014

QUOTE NO 2780

PROJECT: CA-2 Lift Station Rehabilitation

LOCATION: Callaway, FL

ENGINEER: Preble-Rish, Inc.

BID DATE: 11/17/2014

ITEM NO 1 Replacement Pumps & Accessories

QTY	MFGR	MODEL	DESCRIPTION
2	FLYGT	NP3171-453	- Submersible non-clog pumps with "Hard Iron" (25% chrome cast iron) impeller & volute insert, each rated to deliver 800 GPM @ 95' TDH, driven by a 34hp, 1755rpm submersible motor suitable for operation on 460/3/60 service. Accessories shall include the following:
2			-50' of electrical cable
2			- Seal Leakage Detectors with 11 pin base
2			- 4" discharge elbows (4" x 8" ECCENTRIC Increasers by contractor)
2			- 2"upper guide rail brackets, 316 SS
4			- 20' sections of 2" SS guide rail pipe
1			- Certified Factory Test
2			- 20' stainless steel lifting cables
2			- Cable Holder, 316 SS
1			- 36" x 60" (actual opening) double door aluminum wet well access hatch with safety grate, Slide In type
5			- Stainless Steel Float Switches, each with 60' of electrical cable
1			- Cable / Weight Kit for above floats
1			- Equipment Start-Up and Training Service

QTY	MFGR	MODEL	DESCRIPTION
1			- NOTES: 1) Minimum 4" concrete step required under each pump discharge elbow 2) 4" x 8" ECCENTRIC increasers (at pump discharge elbow) by others 3) All concrete, valves, discharge piping, stainless steel mounting hardware (bolts, nuts, anchor bolts, ect.) & installation by others 4) Any required air-release valves, pressure gauge assemblies, or flow meter by others 5) Concrete top modification, vent pipe, and wet well liner by others 6) Any required changes to existing controls, electrical service, utility meter, disconnect switch, conduit & seal fittings, generator & ats, and electrical mounting rack by others

SELLING PRICE FRT ALL'D: $ 40,270.00

QUOTATION TOTAL SELLING PRICE: All Items: _____

JIM HOUSE & ASSOCIATES, INC.
P.O. BOX 101957
IRONDALE, AL 35210

PROPOSAL

TERMS AND CONDITIONS:

1. **ACCEPTANCE:** This proposal is for acceptance by the Buyer within thirty (30) days of the date hereof.
2. **ITEMS INCLUDED:** Only those items and features specifically listed herein are included.
3. **FIRM PRICE:** Prices quoted are firm provided the buyer accepts this proposal within the acceptance period and releases material for production and shipment within thirty (30) days of the submittal of any specification data.
4. **CREDIT/PAYMENT:** Credit extension is subject to approval by Seller and to Buyer's continued credit-worthy status. Payment terms are "Net 30 days" from date of invoice. Accounts in arrears shall bear interest at the rate of one-and-one-half (1-1/2%) per month until paid. Buyer pays collection costs of past due accounts. Startup services on equipment will not be provided without 90% payment of outstanding invoices.
5. **SHIPMENT/DELIVERY:** Delivery shall be FOB point of shipment. Freight charges, unless specifically included in the proposal, are to be paid by the Buyer. Any claims for damage, delay or shortage arising from shipment shall be made by the Buyer directly against the carrier. ANY SHIPMENT SCHEDULES AND/OR DELIVERY DATES SET FORTH IN THIS PROPOSAL REPRESENT SELLER'S BEST ESTIMATE OF TIME REQUIRED TO SHIP AFTER SELLER'S RECEIPT OF AN ACCEPTABLE PURCHASE ORDER AND RELEASE TO SHIP FROM BUYER. SELLER SHALL NOT BE LIABLE FOR ANY LOSS, DAMAGE, EXPENSE, OR CHARGE OF ANY KIND RESULTING FROM ANY DELAY IN SHIPMENT BEYOND SELLER'S REASONABLE CONTROL. Buyer agrees to partial shipments and pro-rata invoices.
6. **CANCELLATION, SUSPENSION, OR DELAY:** Orders may be canceled, suspended or delayed by Buyer at any time prior to shipment provided that the Buyer pays Seller all of Seller's costs to date.
7. **BACKCHARGES:** Seller will only accept backcharges that Seller has specifically agreed to in writing.
8. **FIELD SERVICE:** If field service for checking installation and/or instructions of operation in excess of the time set forth in this proposal is required, Seller's charge for such extra services shall be at the rate of $ 800.00 per diem, including travel time, together with $ 1.50 per mile travel expense.
9. **TAXES:** All applicable taxes or other government charges upon the sale, shipment, and/or use of equipment covered by this proposal shall be added to the total price and shall be paid by the Buyer.
10. **WARRANTIES:** Any warranties on the products sold pursuant to this proposal are those warranties made by the manufacturer of the product. SELLER EXPRESSLY AND SPECIFICALLY DISCLAIMS ALL WARRANTIES, EXPRESS OR IMPLIED, INCLUDING ANY IMPLIED WARRANTY OF MERCHANTABILITY OR FITNESS FOR A PARTICULAR PURPOSE. THE SELLER SHALL NOT BE LIABLE FOR INCIDENTAL OR CONSEQUENTIAL DAMAGES DIRECTLY OR INDIRECTLY ARISING OR RESULTING FROM THE SALE, HANDLING, OR USE OF ANY PRODUCT SOLD PURSUANT TO THIS PROPOSAL. This disclaimer by Seller shall not affect the terms of any warranty made by the manufacturer.
11. **LAWS/PERMITS:** Buyer shall be solely responsible for securing any necessary permits under, and for compliance with all safety, health, and sanitation laws, ordinances, and regulations in connection with the installation and operation of any equipment or other product sold pursuant to this proposal.
12. **ALTERATION OF TERMS:** None of the terms and conditions contained in this proposal may be added to, modified, superseded or otherwise altered except by a written instrument signed by an authorized representative of Seller, and delivered to Buyer by Seller.
13. **RIGHT TO ASSIGN ORDERS:** Jim House & Associates, Inc., acting as a manufacturer's rep, shall have the right and the option to assign Buyer's purchase orders directly to the respective manufacturers on the manufacturer's standard terms and conditions of sale.
14. **GOVERNING LAW:** This Agreement shall be governed under and according to the laws of the State of Alabama.
15. **COMPLETE AGREEMENT:** There are no terms, understandings, representations, warranties, or agreements between Buyer and Seller other than those stated herein.

SUBMITTED BY:

Stenson Biggs

For: **Jim House & Associates, Inc.**

ACCEPTED BY BUYER:

This _____ day of _____, 20 _____

Buyer: _____

By: _____ Title _____

FLYGT	PERFORMANCE CURVE	PRODUCT	TYPE
		NP3171.185	HT

DATE	PROJECT	CURVE NO	ISSUE
2014-11-17		63-453-00-6050	2

	1/1-LOAD	3/4-LOAD	1/2-LOAD
POWER FACTOR	0.90	0.87	0.79
EFFICIENCY	89.5 %	90.5 %	91.0 %
MOTOR DATA	---	---	---

RATED POWER	34	hp
STARTING CURRENT ...	256	A
RATED CURRENT ...	40	A
RATED SPEED	1755	rpm
TOT.MOM.OF INERTIA ...	0.19	kgm2
NO. OF BLADES	2	

IMPELLER DIAMETER: 286 mm

MOTOR #	STATOR	REV
25-19-4AA	01D	10

FREQ.	PHASES	VOLTAGE	POLES
60 Hz	3	460 V	4

GEARTYPE	RATIO
---	---

COMMENTS: Hard Iron

INLET/OUTLET: -/ 4 inch

IMP. THROUGHLET: ---

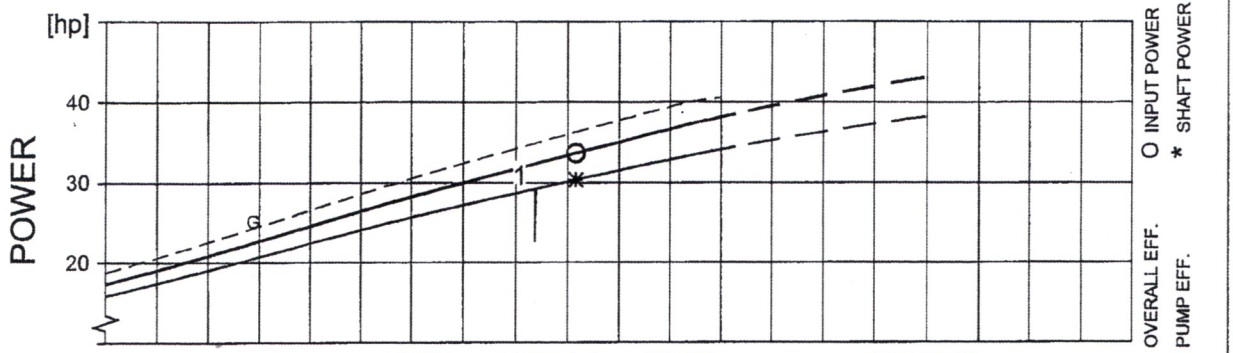

DUTY-POINT	FLOW[USgpm]	HEAD[ft]	POWER [hp]	EFF. [%]	NPSHre[ft]	GUARANTEE
1	838	100	32.5 (29.2)	65.5 (72.6)	17.4	
B.E.P.	916	95.4		65.6 (72.8)	17.7	HI level A

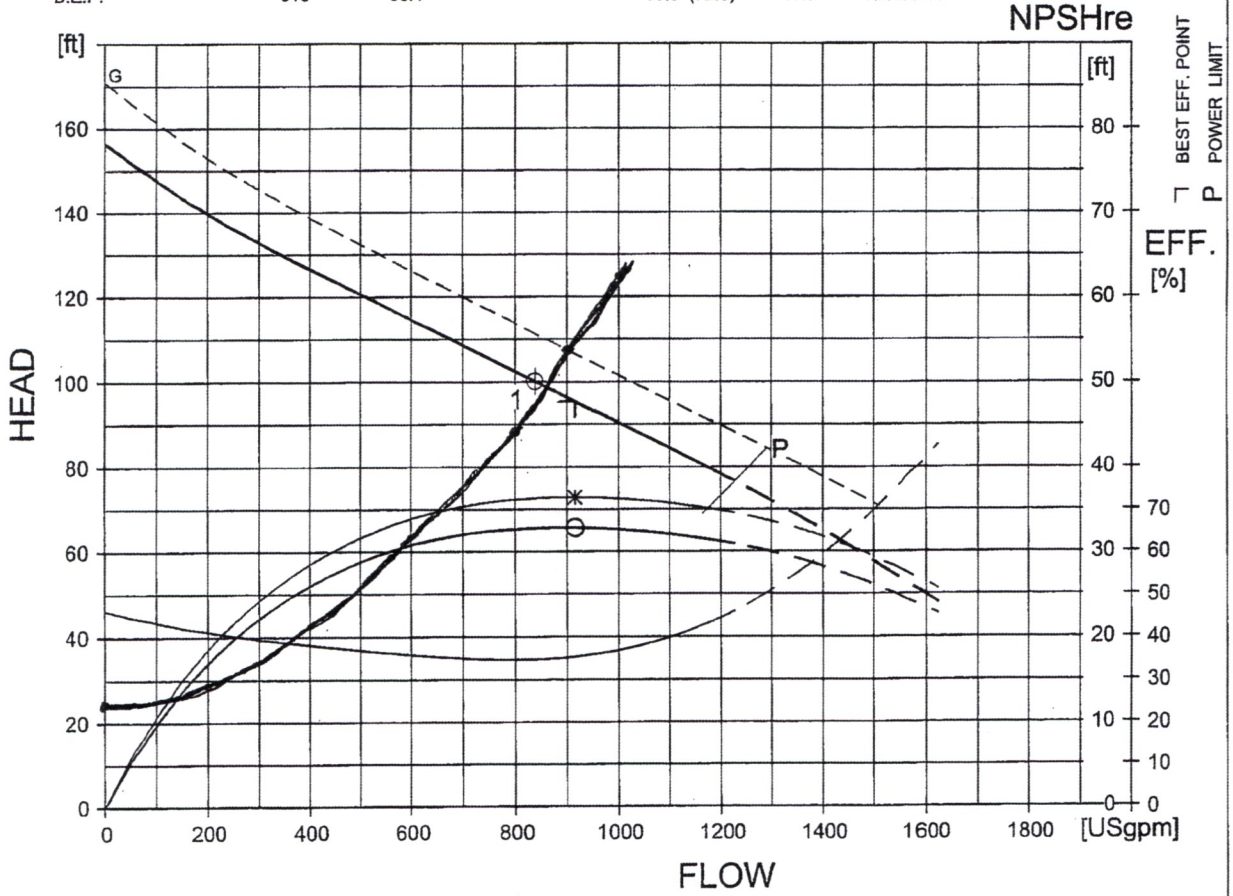

FLYPS3.1.6.3 (20060531)

NPSHre = NPSH3% + min. operational margin

Performance with clear water and ambient temp 40 °C

GUARANTEE BETWEEN LIMITS (G) ACC. TO

HI level A

HOUSE

JIM HOUSE & ASSOCIATES, INC.

Environmental Water Process & Pumping Equipment

HOME OFFICE
1401 Georgia Road, Irondale, AL 35210
P.O. Box 101957
(205) 592-6302 (800) 292-6335
FAX: (205) 951-0291

Since 1957

GULF COAST OFFICE
24312 Highway 98, Fairhope, AL 36532
P.O. Box 1330 (36533)
(251) 928-7867 (800) 919-7867
FAX: (251) 928-7804

November 17, 2014

TO: CONTRACTORS

City of Callaway
Oscar Martinez

QUOTE NO: 2799

PROJECT: CA-2 Lift Station Rehabilitation

LOCATION: Callaway, FL

ENGINEER: Preble-Rish, Inc.

BID DATE: 11/17/2014

For your consideration in bidding this project, we are pleased to offer herewith our unpriced quotation for equipment and/or services.

The equipment and/or services offered in this quotation are subject to the approval of the Engineer and to our standard "Terms and Conditions" of sale, as attached.

Only those items specifically mentioned in this quotation are included.

Freight allowed prices, when quoted, include least expensive freight to the nearest curb stop or RR siding to the job site. Charges for special packing and crating, handling, unloading, demurrage, special carrier, etc. are not included.

Field services, that may be required in addition to that specifically included in the quotation, may be provided at the "per diem" rate shown in the "Terms and Conditions".

Delivery times stated in the quotation represent our best estimate of the time required to manufacture and ship after receipt of final approval and release to manufacture.

PRICE DATA FOR THIS QUOTATION TO FOLLOW:

(COVER SHEET)

Jim House & Associates, Inc - Quote Details November 17, 2014

QUOTE NO 2799

PROJECT: CA-2 Lift Station Rehabilitation

LOCATION: Callaway, FL

ENGINEER: Preble-Rish, Inc.

BID DATE: 11/17/2014

ITEM NO 1 Replacement Pumps with Accessories

QTY	MFGR	MODEL	DESCRIPTION
2	FLYGT	NP3171-453	- Submersible non-clog pumps with "Hard Iron" (25% chrome cast iron) impeller & volute insert, each rated to deliver 800 GPM @ 95' TDH, driven by a 34hp, 1755rpm motor suitable for operation on 460/3/60 service. Accessories shall include the following:
2			- 50' of electrical cable
2			- Seal Leakage Detectors (MiniCas Relays) with 11 pin base
2			- 4" discharge elbows (4" x 8" ECCENTRIC Increasers by contractor)
2			- 2" upper guide rail brackets, 316 SS
2			- Certified Factory PumpTest
1			- Equipment Start-Up and Training Service
1			- NOTES:
			1) Guide Rail Pipe, Lifting Cables, Cable Holder, Access Hatch, and Float Switches with Cabl/Weight Kit not included in this quotation. 2) Minimum 4" concrete step required under each pump discharge elbow 3) 4" x 8" ECCENTRIC increasers (at pump discharge elbow) by others 4) All concrete, valves, discharge piping, stainless steel mounting hardware (bolts, nuts, anchor bolts, ect.) & installation by others 5) Any required air-release valves, pressure gauge assemblies, or flow meter by others 6) Concrete top modification, vent pipe, and wet well liner by others 7) Any required changes to existing controls, electrical service, utility meter, disconnect switch, conduit & seal fittings, generator & ats, and electrical mounting rack by others

QTY	MFGR	MODEL	DESCRIPTION

SELLING PRICE FRT ALL'D: $35,385.00

QUOTATION TOTAL SELLING PRICE: All Items: _____

JIM HOUSE & ASSOCIATES, INC.
P.O. BOX 101957
IRONDALE, AL 35210

PROPOSAL

TERMS AND CONDITIONS:

1. **ACCEPTANCE:** This proposal is for acceptance by the Buyer within thirty (30) days of the date hereof.
2. **ITEMS INCLUDED:** Only those items and features specifically listed herein are included.
3. **FIRM PRICE:** Prices quoted are firm provided the buyer accepts this proposal within the acceptance period and releases material for production and shipment within thirty (30) days of the submittal of any specification data.
4. **CREDIT/PAYMENT:** Credit extension is subject to approval by Seller and to Buyer's continued credit-worthy status. Payment terms are "Net 30 days" from date of invoice. Accounts in arrears shall bear interest at the rate of one-and-one-half (1-1/2%) per month until paid. Buyer pays collection costs of past due accounts. Startup services on equipment will not be provided without 90% payment of outstanding invoices.
5. **SHIPMENT/DELIVERY:** Delivery shall be FOB point of shipment. Freight charges, unless specifically included in the proposal, are to be paid by the Buyer. Any claims for damage, delay or shortage arising from shipment shall be made by the Buyer directly against the carrier. ANY SHIPMENT SCHEDULES AND/OR DELIVERY DATES SET FORTH IN THIS PROPOSAL REPRESENT SELLER'S BEST ESTIMATE OF TIME REQUIRED TO SHIP AFTER SELLER'S RECEIPT OF AN ACCEPTABLE PURCHASE ORDER AND RELEASE TO SHIP FROM BUYER. SELLER SHALL NOT BE LIABLE FOR ANY LOSS, DAMAGE, EXPENSE, OR CHARGE OF ANY KIND RESULTING FROM ANY DELAY IN SHIPMENT BEYOND SELLER'S REASONABLE CONTROL. Buyer agrees to partial shipments and pro-rata invoices.
6. **CANCELLATION, SUSPENSION, OR DELAY:** Orders may be canceled, suspended or delayed by Buyer at any time prior to shipment provided that the Buyer pays Seller all of Seller's costs to date.
7. **BACKCHARGES:** Seller will only accept backcharges that Seller has specifically agreed to in writing.
8. **FIELD SERVICE:** If field service for checking installation and/or instructions of operation in excess of the time set forth in this proposal is required, Seller's charge for such extra services shall be at the rate of $ 800.00 per diem, including travel time, together with $ 1.50 per mile travel expense.
9. **TAXES:** All applicable taxes or other government charges upon the sale, shipment, and/or use of equipment covered by this proposal shall be added to the total price and shall be paid by the Buyer.
10. **WARRANTIES:** Any warranties on the products sold pursuant to this proposal are those warranties made by the manufacturer of the product. SELLER EXPRESSLY AND SPECIFICALLY DISCLAIMS ALL WARRANTIES, EXPRESS OR IMPLIED, INCLUDING ANY IMPLIED WARRANTY OF MERCHANTABILITY OR FITNESS FOR A PARTICULAR PURPOSE. THE SELLER SHALL NOT BE LIABLE FOR INCIDENTAL OR CONSEQUENTIAL DAMAGES DIRECTLY OR INDIRECTLY ARISING OR RESULTING FROM THE SALE, HANDLING, OR USE OF ANY PRODUCT SOLD PURSUANT TO THIS PROPOSAL. This disclaimer by Seller shall not affect the terms of any warranty made by the manufacturer.
11. **LAWS/PERMITS:** Buyer shall be solely responsible for securing any necessary permits under, and for compliance with all safety, health, and sanitation laws, ordinances, and regulations in connection with the installation and operation of any equipment or other product sold pursuant to this proposal.
12. **ALTERATION OF TERMS:** None of the terms and conditions contained in this proposal may be added to, modified, superseded or otherwise altered except by a written instrument signed by an authorized representative of Seller, and delivered to Buyer by Seller.
13. **RIGHT TO ASSIGN ORDERS:** Jim House & Associates, Inc., acting as a manufacturer's rep, shall have the right and the option to assign Buyer's purchase orders directly to the respective manufacturers on the manufacturer's standard terms and conditions of sale.
14. **GOVERNING LAW:** This Agreement shall be governed under and according to the laws of the State of Alabama.
15. **COMPLETE AGREEMENT:** There are no terms, understandings, representations, warranties, or agreements between Buyer and Seller other than those stated herein.

SUBMITTED BY:

Stenson Biggs

For: **Jim House & Associates, Inc.**

ACCEPTED BY BUYER:

This _____ day of _____, 20 _____

Buyer: _____

By: _____ Title _____

AAG ELECTRIC MOTORS & PUMPS, INC

2340 Industrial Dr Panama City, FL 32405
Phone: 850-763-9386 Fax 850-785-8545
brian@aagpumps.com
www.aagpumps.com

PROPOSAL No. 10292014BJ - REV DATE: 11/18/2014

PROPOSAL NAME: Callaway CA-2 Improvements LOCATION: City of Callaway

REPRESENTATIVE: AAG CONTACT: Brian D. Justice

Quantity Two (2) WILO model No. FA15.66E+FKT27.1-4/22KEx, 6" pumps, each to deliver 800 GPM at 95' TDH and complete with 40' of power cable and control cable, base elbow, and stainless steel guide rails. Motor to be oil filled with cooling system, 40 H.P., and operate on 460 Volts, 3 Phase, 60 Hertz power supply. The pump motor shall be Class F insulation, NEMA B design, for wet pit installation.

OPTIONS & ACCESSORIES INCLUDED:

2 - 6" Discharge Base Elbow, Coupling, Upper Bracket,

2 - Dual Pipe with 2 EA. 1.25" SCH. 40. 304SS 20' long

2 - Pump Lifting Chain, 20', 304SS

5 - Level sensor

1 - Level sensor anchor assembly

1 - Cable holder 304SS

1 - 78"x48" double access door/frame assembly with integral safety grate

CLARIFICATIONS & COMMENTS:

Only the items listed are included in this proposal. SCADA, junction boxes, conduit, wiring, piping, valves, fittings, vents, gauges, concrete structures, and installation labor are specifically excluded.

WILO offers a limited five (5) year municipal warranty. A copy is included herewith and is considered part of this proposal. **The first two (2) years of the five (5) year warranty period will be 100%.**

START-UP SUPERVISION: This proposal includes the services of a factory-authorized supervisor for (1) day. Additional time will be charged at $750 per day plus expenses.

2340 Industrial Dr Panama City, FL 32405
Phone: 850-763-9386 Fax 850-785-8545
brian@aagpumps.com
www.aagpumps.com

A field engineer will be provided at start-up in a supervisory capacity only. Any and all costs associated with labor, set-up, etc., for the tests are to be by the contractor.

Total price, F.O.B. shipping point, freight allowed to jobsite in contiguous 48 U.S. states, **$43,516.54** plus any Federal, State or Local Taxes which may apply. Quoted price and delivery good for (45) days. (For other conditions, refer to attached).

Estimated delivery: **6 to 8** weeks based on receipt in our office of acceptable order and complete approval of submittal data, if required. Freight allowed to job site. Two (2) operation and maintenance manuals per WILO standard format included.

We will be providing to the contractor, Two (2) operation and maintenance manuals per WILO standards. If this is not correct, we must be notified by the time of the engineer's approval of submittal data.

TERMS: 100% due and payable 30 days from date of each invoice, subject to continuing approval of credit. Payment of this invoice is in no way contingent upon payment by others. In event any amount becomes past due, buyer agrees to pay seller a fee of 1 1/2% of unpaid balance each month until paid, at the highest legal rate allowed by law, whichever is lower, plus all costs of collection including reasonable attorney's fees. Failure to pay in accordance with terms voids all warranties and no service or start-up will be authorized until account is paid in full including service fee and collection costs.

ACCEPTED THIS ___ DAY OF_____

_____

_____
NAME OF PURCHASER

SUBMITTED THIS **18th** DAY OF **November**

2014

Brian D. Justice
AAG REPRESENTATIVE

ACCEPTED THIS _____ DAY OF _____ 20___

SELLER: AAG ELECTRIC MOTORS & PUMPS, INC. BY: _____

2340 Industrial Dr Panama City, FL 32405
Phone: 850-763-9386 Fax 850-785-8545
brian@aagpumps.com
www.aagpumps.com

Standard Terms of Sale

1. Applicable Terms. These terms govern the purchase and sale of the equipment and related services, if any (collectively, "Equipment"), referred to in Seller's purchase order, quotation, proposal or acknowledgment, as the case may be ("Seller's Documentation"). Whether these terms are included in an offer or an acceptance by Seller, such offer or acceptance is conditioned on Buyer's assent to these terms. Seller rejects all additional or different terms in any of Buyer's forms or documents.

2. Payment. Buyer shall pay Seller the full purchase price as set forth in Seller's Documentation. Unless Seller's Documentation provides otherwise, freight, storage, insurance and all taxes, duties or other governmental charges relating to the Equipment shall be paid by Buyer. If Seller is required to pay any such charges, Buyer shall immediately reimburse Seller. All payments are due within 30 days after receipt of invoice. Buyer shall be charged the lower of 1 ½% interest per month or the maximum legal rate on all amounts not received by the due date and shall pay all of Seller's reasonable costs (including attorneys' fees) of collecting amounts due but unpaid. All orders are subject to credit approval.

3. Delivery. Delivery of the Equipment shall be in material compliance with the schedule in Seller's Documentation. Unless Seller's Documentation provides otherwise, Delivery terms are F.O.B. Seller's facility.

4. Ownership of Materials. All devices, designs (including drawings, plans and specifications), estimates, prices, notes, electronic data and other documents or information prepared or disclosed by Seller, and all related intellectual property rights, shall remain Seller's property. Seller grants Buyer a non-exclusive, non-transferable license to use any such material solely for Buyer's use of the Equipment. Buyer shall not disclose any such material to third parties without Seller's prior written consent.

5. Changes. Seller shall not implement any changes in the scope of work described in Seller's Documentation unless Buyer and Seller agree in writing to the details of the change and any resulting price, schedule or other contractual modifications. This includes any changes necessitated by a change in applicable law occurring after the effective date of any contract including these terms.

6. Warranty. Subject to the following sentence, Seller warrants to Buyer that the Equipment shall materially conform to the description in Seller's Documentation and shall be free from defects in material and workmanship. The foregoing warranty shall not apply to any Equipment that is specified or otherwise demanded by Buyer and is not manufactured or selected by Seller, as to which (i) Seller hereby assigns to Buyer, to the extent assignable, any warranties made to Seller and (ii) Seller shall have no other liability to Buyer under warranty, tort or any other legal theory. If Buyer gives Seller prompt written notice of breach of this warranty within 18 months from delivery or 1 year from acceptance, whichever occurs first (the "Warranty Period"), Seller shall, at its sole option and as Buyer's sole remedy, repair or replace the subject parts or refund the purchase price therefor. If Seller determines that any claimed breach is not, in fact, covered by this warranty, Buyer shall pay Seller its then customary charges for any repair or replacement made by Seller. Seller's warranty is conditioned on Buyer's (a) operating and maintaining the Equipment in accordance with Seller's instructions, (b) not making any unauthorized repairs or alterations, and (c) not being in default of any payment obligation to Seller. Seller's warranty does not cover damage caused by chemical action or abrasive material, misuse or improper installation (unless installed by Seller). THE WARRANTIES SET FORTH IN THIS SECTION ARE SELLER'S SOLE AND EXCLUSIVE WARRANTIES AND ARE SUBJECT TO SECTION 10 BELOW. SELLER MAKES NO OTHER WARRANTIES OF ANY KIND, EXPRESS OR IMPLIED, INCLUDING WITHOUT LIMITATION, ANY WARRANTY OF MERCHANTABILITY OR FITNESS FOR PURPOSE.

7. Indemnity. Seller shall indemnify, defend and hold Buyer harmless from any claim, cause of action or liability incurred by Buyer as a result of third party claims for personal injury, death or damage to tangible property, to the extent caused by Seller's negligence. Seller and settle any indemnified claim. Seller's indemnification is conditioned on Buyer (a) promptly, within the Warranty Period, notifying Seller of any claim, and (b) providing reasonable cooperation in the defense of any claim. shall have the sole authority to direct the defense of and settle any indemnified claim. Seller's indemnification is conditioned on Buyer (a) promptly, within the Warranty Period, notifying Seller of any claim, and (b) providing reasonable cooperation in the defense of any claim.

2340 Industrial Dr Panama City, FL 32405
Phone: 850-763-9386 Fax 850-785-8545
brian@aagpumps.com
www.aagpumps.com

WILO 5 YEAR LIMITED WARRANTY

WILO WATER MANAGEMENT

LIMITED WARRANTY FOR WILO FA PUMPS

ONE-YEAR WARRANTY FOR CERTAIN ANCILLARY EQUIPMENT

EXCEPT AS EXPRESSLY PROVIDED HEREIN, WILO USA LLC MAKES NO REPRESENTATION OR WARRANTY OF ANY KIND, EXPRESSED OR IMPLIED, WITH RESPECT TO ANY PRODUCTS, PARTS OR SERVICES PROVIDED BY WILO USA LLC INCLUDING, BUT NOT LIMITED TO, THE IMPLIED WARRANTIES OF MERCHANTABILITY AND FITNESS FOR A PARTICULAR PURPOSE, APPLICATION OR USE.

LENGTH AND SCOPE OF WARRANTY

WILO USA LLC offers the below limited Warranty against defects in materials and workmanship, for WILO FA Model pumps used in permanent installations in accordance with and subject to all requirements of WILO installation and operation instructions, when such installations are operated under normal conditions pumping wastewater at ambient temperature. Normal conditions specifically include a maximum of 15 equipment starts per hour on constant speed installations or unlimited pump starts per hour on soft start or variable speed installations. Pumps that handle abrasive and/or corrosive liquids are not covered by this warranty unless specifically agreed to, and approved in writing by WILO USA LLC. FA pumps are warranted only for the original application and specific hydraulic conditions.

Motors, electrical control boxes and all other items other than WILO pumps furnished by WILO USA LLC are covered by a Limited Warranty for a period of one (1) year from date of commissioning, or six (6) months after shipment, and are subject to all of the conditions, limitations, and requirements stated herein.

The warranty period starts at either commissioning or six (6) months after shipment, whichever comes first. Commissioning is defined to be the day that the unit is put into service and start up is completed.

OBLIGATIONS OF WILO

WILO USA LLC's sole obligation shall be to either repair, modify or replace, at its sole discretion, (a) a defective municipal use FA pump which is received by WILO within five (5) years or a defective industrial use FA pump which is received by WILO within two (2) years after the start of the warranty period that (b) has been inspected by WILO to confirm the existence of a defect.

Municipal and industrial use pumps received within one (1) year of the start of the warranty period shall be repaired at no charge. Municipal pumps received in years two through five (2-5), and Industrial use pumps received in year two (2) of the warranty period shall be repaired at a cost of fifty percent (50%) of the then-current WILO listed sale price for parts and listed price for labor.

FA pumps shipped to WILO for warranty service must be shipped prepaid to WILO, or a WILO Authorized Service Center. Repaired pumps shall be returned to the purchaser freight collect. Electrical Schematics and start-up reports satisfactory to WILO are required from purchaser prior to consideration of any claim under this Limited Warranty.

Commissioning and initial start-up of WILO Model FA Pumps shall be performed by WILO or a WILO Authorized Service Center, and a written start-up report shall be generated by WILO. A copy of the start-up report shall be made available to the purchaser. Should a WILO Model FA Pump require a repair during the warranty period, WILO, or a WILO Authorized Service Center, shall provide re-commissioning of the repaired pump at no charge to the purchaser and issue a new start-up report. Operation of a WILO Model FA pump without an approved start-up shall make any warranty from WILO null and void without written permission from an officer of the company of WILO.

2340 Industrial Dr Panama City, FL 32405
Phone: 850-763-9386 Fax 850-785-8545
brian@aagpumps.com
www.aagpumps.com

OBLIGATIONS OF PURCHASER

The purchaser shall register their WILO Model FA www.wilosales.com/register pump(s) no later than at commissioning and start-up. Non-registered pumps shall only be warranted for one year from shipment. Registration information provided to WILO will be confidential and not released to any entity except for the purchaser and as needed to WILO's authorized service providers.

The purchaser is responsible for all freight and rigging charges for removing pumps from service and delivery of the pumps to and from a WILO Authorized Service Center. The purchaser is responsible for all repair costs that are deemed to be outside of the scope of WILO's warranty. The purchaser should inspect all shipments/deliveries upon receipt. Damaged products should not be accepted, or signed for as "damaged" on the original bill of lading. WILO must be notified immediately of any shipments which were damaged. Upon receipt of delivery from WILO you have a period of 48hrs to declare any missing material listed on the BOL but not received. After this period WILO USA cannot be responsible for claims of missing items after this time.

The purchaser shall connect all WILO provided motor sensors to the control system. Motor sensor control circuitry must be operational at start-up, and at all times.

WILO requires any application using variable frequency drives to use load side filters where power cable lengths are in excess of 50 feet.

EXCLUSIONS AND EXCEPTIONS

This Limited Warranty excludes damage or wear to products caused by misapplication of product, improper maintenance, accident, abuse, unauthorized alteration or repair, Acts of God, or installation or operation that is non-compliant with WILO installation and operation instructions.

This Limited Warranty excludes normal wear and tear of wear rings, impellers, volutes and heat exchangers and other consumable parts and does not cover any failure caused by lightning, single-phasing, incorrect voltage, other defects or interruptions in the power supply or by splicing the electrical cable between the pump control panel and the pumps.

This Limited Warranty shall only apply to the type of WILO pumps described above, and shall not apply to any WILO pumps, electrical control equipment, or other items furnished which have been repaired by anyone other than WILO or a WILO Authorized Service Center.

City of Callaway Board of Commissioners
Agenda Item Summary

December 9, 2014

Award Bid/Water Meter Equipment Selection

1. PLACED ON AGENDA BY:

J. Michael Fuller, City Manager

2. AGENDA:

PRESENTATION ☐
PUBLIC HEARING ☐
CONSENT ☐
OLD BUSINESS ☒
REGULAR ☐

3. IS THIS ITEM BUDGETED (IF APPLICABLE)?: YES ☒ NO ☐

4. BACKGROUND: (WHY, WHAT, WHO, WHERE, WHEN, HOW, & IDENTIFY ALL ATTACHMENTS)

The City received three (3) responses to the Request for Proposals for AMR/AMI capable water meters. The bids are as follows:

- HD Supply Waterworks.....$1,495,090.00
- Ferguson Waterworks.....$1,047,694.20
- Empire Pipe and Supply....$1,119,495.00

HD Supply Waterworks was the only responsive bidder that came nearest to city specifications for a Migratable Drive-by Radio Read System including 6140 AMR/AMI water meters, radio read system and supporting equipment. HD Supply has previously supplied the City with meters and equipment that utilized electromagnetic flow measurement technology. This is the Sensus/iPerl meter system which has proven to be a reliable system that will capture water flow loss we have experienced. In order to maintain consistency and standardization of our meter assets, staff recommends awarding the bid to HD Supply Waterworks. The proposed bid is within the amount budgeted by the City for FY 15.

ATTACHMENT:

- Bid Proposals Packages

5. REQUESTED MOTION/ACTION:

Staff recommends the City Commission award the bid to HD Supply Waterworks for $1,495,090.00 and authorize the City Manager to enter into a project agreement.

City of Callaway Board of Commissioners
Agenda Item Summary

December 9, 2014

Water Meter Installation Piggyback Contract

1. PLACED ON AGENDA BY:

J. Michael Fuller, City Manager

2. AGENDA:

PRESENTATION ☐
PUBLIC HEARING ☐
CONSENT ☐
OLD BUSINESS ☐
REGULAR ☒

3. IS THIS ITEM BUDGETED (IF APPLICABLE)?: YES ☒ NO ☐

4. BACKGROUND: (WHY, WHAT, WHO, WHERE, WHEN, HOW, & IDENTIFY ALL ATTACHMENTS)

The proposed water meter purchase will require the need to contract the installation. In this instance, the Public Works Department recommends using a piggyback contract. In general, a "piggyback contract" or "cooperative procurement" is a method of procuring goods or services by another public entity's award of Invitation to Bid or Request for Proposal. The National Institute of Governmental Purchasing (NIGP) supports the use of cooperative procurement and finds it a valuable tool to obtain necessary goods and services by aggregating volume, securing best pricing, and reducing administrative overhead (*NIGP*, 2013).

The City's Public Works Department has located a piggyback contract with Utility Solutions of America (USA) used by the Pace Water in Pace, FL. The piggyback contract with USA will save the City time and money because it offers good terms that the City wouldn't otherwise be able to obtain. USA will hold a three (3) year price guarantee at $30.00 per meter installation. USA can provide the City with flow reports to compare the old meters and the new meters that will be installed. The cost of these flow reports will be offset by the sale of the City's scrap meters. The flow report will be a valuable document that will show water loss that currently experienced in the City's water system.

ATTACHMENT:

- Copy of piggyback contract with Pace, Florida

5. REQUESTED MOTION/ACTION:

Staff recommends the City Commission approved the piggyback contract and authorize the City Manager to execute the agreement.

UTILITY SOLUTIONS of AMERICA

Pricing Schedule

Core Services

(See Attachment in Contract Documents)

Assumptions

Scope of Work, General

1. USA assumes AMR installation project will be substantially completed within 6 months or less of receiving notice to precede.
2. USA will make as many as three physical attempts and three phone-call attempts in an effort to perform an installation before returning the work order to the utility (RTU).
3. USA assumes that the project RTU rate will not exceed 3%.
4. ~~USA assumes customer phone numbers will be provided by the utility~~.
5. USA assumes all meters are located outside and are readily accessible.
6. USA assumes that all meters are located in close proximity and will be released in route read order.
7. USA assumes that the utility will provide initial customer communications.
8. USA assumes that all printed communication materials, such as notification letters and ~~door hangers~~ will be provided by the utility.
9. USA assumes it will not be responsible for extensive sorting or disposing of old material removed from the service territory.
10. USA assumes it will not be responsible for the disposal of lead seals or other hazardous waste.
11. USA assumes that it will only be responsible for the repair of damages caused directly by USA services.
12. USA assumes utility will provide keys for the removal and replacement of locking devices.

13. USA assumes that utility will provide a black-out schedule prior to the project start date.
14. USA assumes that utility will provide address and meter location data prior to the project start date.
15. Pricing assumes a seamless flow of work. USA assumes there will be no work stoppages other than designated holidays and weather days. USA requests 45 days written notice if a work stoppage is necessary that is not a result of USA performance.
16. The price proposal is based on a five day work week; however, USA reserves the right to work Saturdays as necessary in the event of delays.
17. USA assumes that the utility will provide USA with adequate storage facility for all meters and meter product.
18. ~~Pricing does include photographs of meters.~~
19. Pricing does include sub meter GPS collection points.
20. ~~Pricing does include material (conduit) for mounting MXU's under meter lids.~~
21. Pricing for retrofitting compound meters with two registers will be priced per register.

Scope of Work, Water Meters

1. USA assumes that all installation material including water meters, MXU's, water-meter registers, meter-pit lids, valves, washers, gaskets, strainers, compression fittings, meter couplings and piping will be provided to USA and will be present at the time of need.
2. USA assumes it will transport and dump any necessary soil and debris removed from meter pits.
3. USA assumes a dumping site will be provided by the utility.
4. Pricing for large water meter retrofits assumes meter registers do not require removal of impeller shaft along with register.
5. USA assumes that it will only be responsible for the repair of damages caused directly by USA services.
6. USA will not be held responsible for damages occurring more than 6" on either side of the water meter, unless directly attributable to the negligence of USA installer.
7. USA will not be responsible for the repair of pre-existing conditions such as excessive rust or corrosive galvanized pipe.
8. The price proposal does not include additional labor or groundwork needed to access meters (including but not limited to the cutting, removal and replacement of asphalt or concrete). Pricing for such services may be provided upon request.
9. USA is not responsible for damage caused by excessive pressure (greater than 80 PSI).
10. USA assumes it will return all removed material including water meters, water meter registers, rubber washers, and meter-pit lids to a single location for sorting and removal by the utility.
11. Pricing assumes that meters are not located in confined space, as defined by OSHA. Pricing for additional labor to exchange or retrofit meters in confined space is available upon request.
12. USA assumes that new meters will be factory potted with register and MXU.

UTILITY SOLUTIONS of AMERICA

13. USA assumes that utility will grant permission to utilize heavy equipment to perform large meter installations if necessary.
14. USA assumes that replacement meters are the same lay and length as the meters being removed.
15. USA assumes all curb stops are in good working condition.
16. Pricing does not include meter box removal or relocation. All box replacements/dig outs will be invoiced at $45.00 per box. USA will do any box replacement that can be done with manual excavation. If it requires mechanical excavation, it is excluded from our scope of work. 25.00 DAS SRS
17. Pricing does not include installation of curb stops, valves or backflow devices. Pricing for such services is available upon request.
18. USA will be "held harmless" and will not be liable to any damage incurred by performing its normal duties at an address with the electrical system grounded to the water lines.

Contract/Billing

1. USA assumes there will be a force-majeure clause in the contract.
2. USA assumes there is no prevailing wage or union requirements.
3. DAS ~~USA assumes no retainage will be withheld from payments.~~
4. SRS USA will bill for completed installs on the 15th and 30th of each month. Net 15 day pay terms. DAS SRS
5. ~~USA will not be responsible for performance, payment or warranty bonds.~~
6. USA assumes that there are no liquidated damage penalties.

Other

1. This quote is valid for 90 days.
2. USA warranties all installation services for a period of 12 months.

EJCDC
SUGGESTED FORM OF AGREEMENT
BETWEEN OWNER AND CONTRACTOR FOR
CONSTRUCTION CONTRACT (STIPULATED PRICE)

THIS AGREEMENT is by and between Pace Water System, Inc.

(Owner) and Utility Solutions of America, Inc.

(Contractor).

Owner and Contractor, in consideration of the mutual covenants set forth herein, agree as follows:

ARTICLE 1 - WORK

1.01 Contractor shall complete all Work as specified or indicated in the Contract Documents. The Work is generally described as follows:

Change out of meters to iPearls and Omnis with transmitters to an automatic radio read system.

ARTICLE 2 - THE PROJECT

2.01 The Project for which the Work under the Contract Documents may be the whole or only a part is generally described as follows:

Automatic Meter Reading Installation Project

ARTICLE 3 - ENGINEER

3.01 The Project has been designed by Pace Water System, Inc. (Engineer and Owner), who is to act as Owner's representative, assume all duties and responsibilities, and have the rights and authority assigned to Engineer in the Contract Documents in connection with the completion of the Work in accordance with the Contract Documents.

Copyright © 2002 National Society of Professional Engineers for EJCDC. All rights reserved.

ARTICLE 4 - CONTRACT TIMES

4.01 Time of the Essence

A. All time limits for Milestones, if any, Substantial Completion, and completion and readiness for final payment as stated in the Contract Documents are of the essence of the Contract.

4.02 Days to Achieve Substantial Completion and Final Payment

A. The Work will be substantially completed within 90 days after the date when the Contract Times commence to run as provided in Paragraph 2.03 of the General Conditions, and completed and ready for final payment in accordance with Paragraph 14.07 of the General Conditions within 120 days after the date when the Contract Times commence to run.

4.03 Liquidated Damages

A. Contractor and Owner recognize that time is of the essence of this Agreement and that Owner will suffer financial loss if the Work is not completed within the times specified in Paragraph 4.02 above, plus any extensions thereof allowed in accordance with Article 12 of the General Conditions. The parties also recognize the delays, expense, and difficulties involved in proving in a legal or arbitration proceeding the actual loss suffered by Owner if the Work is not completed on time. Accordingly, instead of requiring any such proof, Owner and Contractor agree that as liquidated damages for delay (but not as a penalty), Contractor shall pay Owner $0 for each day that expires after the time specified in Paragraph 4.02 for Substantial Completion until the Work is substantially complete. After Substantial Completion, if Contractor shall neglect, refuse, or fail to complete the remaining Work within the Contract Time or any proper extension thereof granted by Owner, Contractor shall pay Owner $0 for each day that expires after the time specified in Paragraph 4.02 for completion and readiness for final payment until the Work is completed and ready for final payment.

ARTICLE 5 - CONTRACT PRICE

5.01 Owner shall pay Contractor for completion of the Work in accordance with the Contract Documents an amount in current funds equal to the sum of the amounts determined pursuant to Paragraphs 5.01.A, 5.01.B, and 5.01.C below:

A. For all Work other than Unit Price Work, a Lump Sum of:

_____ ($_____)
(words) (numerals)

All specific cash allowances are included in the above price and have been computed in accordance with paragraph 11.02 of the General Conditions.

B. For all Unit Price Work, an amount equal to the sum of the established unit price for each separately identified item of Unit Price Work times the estimated quantity of that item as indicated in this paragraph 5.01.B:

As provided in Paragraph 11.03 of the General Conditions, estimated quantities are not guaranteed, and determinations of actual quantities and classifications are to be made by Engineer as provided in Paragraph 9.07 of the General Conditions. Unit prices have been computed as provided in Paragraph 11.03 of the General Conditions.

C. For all Work, at the prices stated in Contractor's Bid, attached hereto as an exhibit.

ARTICLE 6 - PAYMENT PROCEDURES

6.01 Submittal and Processing of Payments

A. Contractor shall submit Applications for Payment in accordance with Article 14 of the General Conditions. Applications for Payment will be processed by Engineer as provided in the General Conditions.

Copyright © 2002 National Society of Professional Engineers for EJCDC. All rights reserved.

I. BID FORM

Scope of Work	Quantity	Unit Price	Extended Price
Replace $^5/_8$" or ¾" meter with new AMR meter	10000	30.52	305,200.00
Replace 1" meter with new AMR meter	100	35.02	3,502.00
Replace 1-½" meter with new AMR meter	50	173.02	8,651.00
Replace 2" meter with new AMR meter	1	223.02	223.02
Replace 3" meter with new AMR meter (same lay length)	1	348.02	348.02
Replace 4" meter with new AMR meter (same lay length)	1	448.02	448.02
Retrofit existing meter with AMR (for sizes 5/8" thru 1")	1	18.02	18.02
Retrofit existing meter with AMR (for sizes 1-½" and larger)	1	23.02	23.02
Removal and replacement of concrete/asphalt, including temporary patches (per square foot)	1	25.00	25.00
Removal and replacement of turf grass/sod, including temporary patches (per square foot)	1	25.00	25.00
Photography services (capture and electronically submit digital photo data per meter)	1	0.00	0.00
Geo-coding services (capture and electronically submit GPS data per meter)	0	0.00	0.00
Electronic transfer services (download/upload required record data per meter)	0	0.00	0.00
Install new meter box and/or lid	1	25.00	25.00
Install new AMR meter, meter box w/ lid, and new curb stop valve (new service ≤ 1")	1	87.00	87.00
Replace Existing Curb Stop	1	50.00	50.00
Replace Existing Backflow and Shut Off Valve Assembly	1	50.00	50.00
TOTAL PROJECT COST			**$318,675.10**

NOTE: All new AMR water meters shall be Sensus iPERL or Sensus Omni. The project contingency allowance is for the sole use of the Pace Water System, Inc. and is not be expended without written authorization of PWS.

6.02 Progress Payments; Retainage

A. Owner shall make progress payments on account of the Contract Price on the basis of Contractor's Applications for Payment on or about the 15th day of each month during performance of the Work as provided in Paragraphs 6.02.A.1 and 6.02.A.2 below. All such payments will be measured by the schedule of values established as provided in Paragraph 2.07.A of the General Conditions (and in the case of Unit Price Work based on the number of units completed) or, in the event there is no schedule of values, as provided in the General Requirements:

1. Prior to Substantial Completion, progress payments will be made in an amount equal to the percentage indicated below but, in each case, less the aggregate of payments previously made and less such amounts as Engineer may determine or Owner may withhold, including but not limited to liquidated damages, in accordance with Paragraph 14.02 of the General Conditions:

a. 90 percent of Work completed (with the balance being retainage). If the Work has been 50 percent completed as determined by Engineer, and if the character and progress of the Work have been satisfactory to Owner and Engineer, Owner, on recommendation of Engineer, may determine that as long as the character and progress of the Work remain satisfactory to them, there will be no additional retainage; and

b. 0 percent of cost of materials and equipment not incorporated in the Work (with the balance being retainage).

2. Upon Substantial Completion, Owner shall pay an amount sufficient to increase total payments to Contractor to 95 percent of the Work completed, less such amounts as Engineer shall determine in accordance with Paragraph 14.02.B.5 of the General Conditions and less 5 percent of Engineer's estimate of the value of Work to be completed or corrected as shown on the tentative list of items to be completed or corrected attached to the certificate of Substantial Completion.

6.03 Final Payment

A. Upon final completion and acceptance of the Work in accordance with Paragraph 14.07 of the General Conditions, Owner shall pay the remainder of the Contract Price as recommended by Engineer as provided in said Paragraph 14.07.

ARTICLE 7 - INTEREST

7.01 All moneys not paid when due as provided in Article 14 of the General Conditions shall bear interest at the rate of 0 percent per annum.

ARTICLE 8 – CONTRACTOR'S REPRESENTATIONS

8.01 In order to induce Owner to enter into this Agreement Contractor makes the following representations:

A. Contractor has examined and carefully studied the Contract Documents and the other related data identified in the Bidding Documents.

B. Contractor has visited the Site and become familiar with and is satisfied as to the general, local, and Site conditions that may affect cost, progress, and performance of the Work.

C. Contractor is familiar with and is satisfied as to all federal, state, and local Laws and Regulations that may affect cost, progress, and performance of the Work.

D. Contractor has obtained and carefully studied (or assumes responsibility for doing so) all examinations, investigations, explorations, tests, studies, and data concerning conditions (surface, subsurface, and Underground Facilities) at or contiguous to the Site which may affect cost, progress, or performance of the Work or which relate to any aspect of the means, methods, techniques, sequences, and procedures of construction to be employed by Contractor, including any specific means, methods, techniques, sequences, and procedures of construction expressly required by the Bidding Documents, and safety precautions and programs incident thereto.

Copyright 8 2002 National Society of Professional Engineers for EJCDC. All rights reserved.

E. Contractor does not consider that any further examinations, investigations, explorations, tests, studies, or data are necessary for the performance of the Work at the Contract Price, within the Contract Times, and in accordance with the other terms and conditions of the Contract Documents.

F. Contractor is aware of the general nature of work to be performed by Owner and others at the Site that relates to the Work as indicated in the Contract Documents.

G. Contractor has correlated the information known to Contractor, information and observations obtained from visits to the Site, reports and drawings identified in the Contract Documents, and all additional examinations, investigations, explorations, tests, studies, and data with the Contract Documents.

H. Contractor has given Engineer written notice of all conflicts, errors, ambiguities, or discrepancies that Contractor has discovered in the Contract Documents, and the written resolution thereof by Engineer is acceptable to Contractor.

I. The Contract Documents are generally sufficient to indicate and convey understanding of all terms and conditions for performance and furnishing of the Work.

ARTICLE 9 - CONTRACT DOCUMENTS

9.01 Contents

A. The Contract Documents consist of the following:

1. This Agreement (pages 1 to 6, inclusive).

2. ~~Performance bond (pages _____ to _____, inclusive). ($100,000.00).~~

3. ~~Payment bond (pages _____ to _____, inclusive).~~ HAS DAS

4. Other bonds (pages _____ to _____, inclusive).

   a. _____ (pages _____ to _____, inclusive).

   b. _____ (pages _____ to _____, inclusive).

   c. _____ (pages _____ to _____, inclusive).

5. General Conditions (pages _____ to _____, inclusive).

6. Supplementary Conditions (pages _____ to _____, inclusive).

7. Specifications as listed in the table of contents of the Project Manual.

8. Drawings consisting of _____ sheets with each sheet bearing the following general title: _____ [or] the Drawings listed on attached sheet index.

9. Addenda (numbers _____ to _____, inclusive).

10. Exhibits to this Agreement (enumerated as follows):

    a. Contractor's Bid (pages _____ to _____, inclusive).

    b. Documentation submitted by Contractor prior to Notice of Award (pages _____ to _____, inclusive).

    c. Contractor's Proposal

    d. Contractor's Scope of Work/Assumptions

Copyright © 2002 National Society of Professional Engineers for EJCDC. All rights reserved.

11. The following which may be delivered or issued on or after the Effective Date of the Agreement and are not attached hereto:

a. Notice to Proceed (pages _____ to _____, inclusive).

b. Work Change Directives.

c. Change Order(s).

B. The documents listed in Paragraph 9.01.A are attached to this Agreement (except as expressly noted otherwise above).

C. There are no Contract Documents other than those listed above in this Article 9.

~~D. The Contract Documents may only be amended, modified, or supplemented as provided in Paragraph 3.04 of the General Conditions.~~ DAB DAB

ARTICLE 10 - MISCELLANEOUS

10.01 Terms

~~A. Terms used in this Agreement will have the meanings stated in the General Conditions and the Supplementary Conditions.~~ DAB DAB

10.02 Assignment of Contract

A. No assignment by a party hereto of any rights under or interests in the Contract will be binding on another party hereto without the written consent of the party sought to be bound; and, specifically but without limitation, moneys that may become due and moneys that are due may not be assigned without such consent (except to the extent that the effect of this restriction may be limited by law), and unless specifically stated to the contrary in any written consent to an assignment, no assignment will release or discharge the assignor from any duty or responsibility under the Contract Documents.

10.03 Successors and Assigns

A. Owner and Contractor each binds itself, its partners, successors, assigns, and legal representatives to the other party hereto, its partners, successors, assigns, and legal representatives in respect to all covenants, agreements, and obligations contained in the Contract Documents.

10.04 Severability

A. Any provision or part of the Contract Documents held to be void or unenforceable under any Law or Regulation shall be deemed stricken, and all remaining provisions shall continue to be valid and binding upon Owner and Contractor, who agree that the Contract Documents shall be reformed to replace such stricken provision or part thereof with a valid and enforceable provision that comes as close as possible to expressing the intention of the stricken provision.

IN WITNESS WHEREOF, Owner and Contractor have signed this Agreement in duplicate. One counterpart each has been delivered to Owner and Contractor. All portions of the Contract Documents have been signed or identified by Owner and Contractor or on their behalf.

This Agreement will be effective on November 13th, 2013 (which is the Effective Date of the Agreement).

OWNER:	CONTRACTOR:
PACE WATER SYSTEM, INC.	Utility Solutions of America, Inc.

Copyright © 2002 National Society of Professional Engineers for EJCDC. All rights reserved.

By: _____

Title: GENERAL MANAGER

[CORPORATE SEAL]

Attest: _____

Title: _____

Address for giving notices:

_____

_____

_____

(If Owner is a corporation, attach evidence of authority to sign. If Owner is a public body, attach evidence of authority to sign and resolution or other documents authorizing execution of Owner-Contractor Agreement.)

By: Gary St. Clair

Title: President

[CORPORATE SEAL]

Attest: Gail S. Burgess

Title: Vice President

UTILITY SOLUTIONS OF AMERICA INC. CORPORATE SEAL 2011 GEORGIA

Address for giving notices:

Utility Solutions of America, Inc.

1074 Eagles Brooke Dr.

Locust Grove, GA 30248

License No.: UC 302232

(Where applicable)

Agent for service or process: same as above

_____

(If Contractor is a corporation or a partnership, attach evidence of authority to sign.)

Copyright © 2002 National Society of Professional Engineers for EJCDC. All rights reserved.

UTILITY SOLUTIONS of AMERICA

Service Offering

The pricing schedule includes:

1. Replacement of existing water meters with AMR equipped water meters
2. Restoration of site to pre-existing condition
3. Experienced installation staff
4. Project management staff
5. Provision of staff to dispatch work orders and manage work order system
6. Inventory receipt and control
7. Quality audit program
8. Certified operator qualification program
9. Health and safety program
10. Training program
11. Performance reports
12. Uniform vehicles with appropriate signage
13. Miscellaneous tools and equipment
14. Uniforms, badges, personal protective equipment
15. Employment screening: background checks, drug testing, etc.
16. Travel and accommodations
17. Adequate insurance coverage
18. One year installation warranty
19. All licenses and permits
20. Meter lid installation

UTILITY SOLUTIONS of AMERICA

Quality Management Program

USA will quality audit 100% of the retrofit and exchange procedures performed by our employees during the first ten days of work and 5% thereafter. If an employee produces an error rate of equal to or greater than 1%, they will be re-trained. If an employee produces an error rate of equal to or greater than 1% after being retrained, the employee will be dismissed.

In addition to the quality audit procedure outlined above, members of the project management team and the corporate training team perform random field audits to ensure that technicians are following protocol. Deviations are addressed immediately.

Inventory Management Program

The installation technicians will sign for the inventory they receive. At the end of their shift, the installation technicians will count uninstalled inventory. Inventory retrieved from the field will be palletized or stored in large storage bins. The inventory recorded will be reconciled against the completed work order file on a periodic basis. Inventory reports will be made available on a periodic basis or upon request.

UTILITY SOLUTIONS of AMERICA

Pricing Schedule

Core Services

(See Attachment in Contract Documents)

Assumptions

Scope of Work, General

1. USA assumes AMR installation project will be substantially completed within 6 months or less of receiving notice to precede
2. USA will make as many as three physical attempts and three phone-call attempts in an effort to perform an installation before returning the work order to the utility (RTU).
3. USA assumes that the project RTU rate will not exceed 3%.
4. ~~USA assumes customer phone numbers will be provided by the utility~~.
5. USA assumes all meters are located outside and are readily accessible.
6. USA assumes that all meters are located in close proximity and will be released in route read order.
7. USA assumes that the utility will provide initial customer communications.
8. USA assumes that all printed communication materials, such as notification letters and ~~door hangers~~ will be provided by the utility.
9. USA assumes it will not be responsible for extensive sorting or disposing of old material removed from the service territory.
10. USA assumes it will not be responsible for the disposal of lead seals or other hazardous waste.
11. USA assumes that it will only be responsible for the repair of damages caused directly by USA services.
12. USA assumes utility will provide keys for the removal and replacement of locking devices.

13. USA assumes that utility will provide a black-out schedule prior to the project start date.
14. USA assumes that utility will provide address and meter location data prior to the project start date.
15. Pricing assumes a seamless flow of work. USA assumes there will be no work stoppages other than designated holidays and weather days. USA requests 45 days written notice if a work stoppage is necessary that is not a result of USA performance.
16. The price proposal is based on a five day work week; however, USA reserves the right to work Saturdays as necessary in the event of delays.
17. USA assumes that the utility will provide USA with adequate storage facility for all meters and meter product.
18. ~~Pricing does include photographs of meters.~~
19. Pricing does include sub meter GPS collection points.
20. ~~Pricing does include material (conduit) for mounting MXU's under meter lids.~~
21. Pricing for retrofitting compound meters with two registers will be priced per register.

Scope of Work, Water Meters

1. USA assumes that all installation material including water meters, MXU's, water-meter registers, meter-pit lids, valves, washers, gaskets, strainers, compression fittings, meter couplings and piping will be provided to USA and will be present at the time of need.
2. USA assumes it will transport and dump any necessary soil and debris removed from meter pits.
3. USA assumes a dumping site will be provided by the utility.
4. Pricing for large water meter retrofits assumes meter registers do not require removal of impeller shaft along with register.
5. USA assumes that it will only be responsible for the repair of damages caused directly by USA services.
6. USA will not be held responsible for damages occurring more than 6" on either side of the water meter, unless directly attributable to the negligence of USA installer.
7. USA will not be responsible for the repair of pre-existing conditions such as excessive rust or corrosive galvanized pipe.
8. The price proposal does not include additional labor or groundwork needed to access meters (including but not limited to the cutting, removal and replacement of asphalt or concrete). Pricing for such services may be provided upon request.
9. USA is not responsible for damage caused by excessive pressure (greater than 80 PSI).
10. USA assumes it will return all removed material including water meters, water meter registers, rubber washers, and meter-pit lids to a single location for sorting and removal by the utility.
11. Pricing assumes that meters are not located in confined space, as defined by OSHA. Pricing for additional labor to exchange or retrofit meters in confined space is available upon request.
12. USA assumes that new meters will be factory potted with register and MXU.

13. USA assumes that utility will grant permission to utilize heavy equipment to perform large meter installations if necessary.
14. USA assumes that replacement meters are the same lay and length as the meters being removed.
15. USA assumes all curb stops are in good working condition.
16. Pricing does not include meter box removal or relocation. All box replacements/dig outs will be invoiced at ~~$45.00~~ per box. USA will do any box replacement that can be done with manual excavation. If it requires mechanical excavation, it is excluded from our scope of work. 25.00 DAS SRS
17. Pricing does not include installation of curb stops, valves or backflow devices. Pricing for such services is available upon request.
18. USA will be "held harmless" and will not be liable to any damage incurred by performing its normal duties at an address with the electrical system grounded to the water lines.

Contract/Billing

1. USA assumes there will be a force-majeure clause in the contract.
2. USA assumes there is no prevailing wage or union requirements.
3. DAS ~~USA assumes no retainage will be withheld from payments.~~
4. SRS USA will bill for completed installs on the 15th and 30th of each month. Net 15 day pay terms. DAS SRS
5. ~~USA will not be responsible for performance, payment or warranty bonds.~~
6. USA assumes that there are no liquidated damage penalties.

Other

1. This quote is valid for 90 days.
2. USA warranties all installation services for a period of 12 months.

Automatic Meter Reading Installation Project

Pace Water System, Inc. (PWS) hereby requests proposals and pricing from professional services firms experienced in and capable of managing the PWS's system-wide deployment of Sensus FlexNet automatic meter reading (AMR) technology to approximately 13,500 existing potable water meters. PWS recognizes that a qualified professional services firm can efficiently expedite this system-wide deployment and, based upon the multiple components that must be installed, configured, commissioned, and programmed, PWS intends to award one contract to one entity ("Firm") that will be responsible for every aspect of this deployment. For PWS to implement this program while remaining 'budget friendly,' the contract will include 2,500 meters to be deployed annually with optional contract renewal occurring annually after year one for a period of approximately five years.

A. PWS will hold a pre-proposal conference on Wednesday, January 23, 2013 at 10:00 a.m. in the PWS Board Room located at 4401 Woodbine Rd., Pace, Florida, 32571.

B. All questions must be submitted in writing to PWS no later than 12:00 p.m., on Wednesday, January 30, 2013. Responses will be provided no later than 2:00 p.m., on Friday, February 1, 2013.

C. Proposals must be submitted at the PWS Office, located at 4401 Woodbine Rd., Pace, Florida, 32571, no later than 3:00 p.m., on Tuesday, February 5, 2013. Proposals must be plainly marked with the respondent's name and "**RFP FOR AUTOMATIC METER READING INSTALLATION PROJECT**". Proposals received after this time will be deemed non-responsive and returned to the respondent unopened.

D. Each proposal must be accompanied by a bid bond payable to PWS for five percent (5%) of the bid amount as shown on the Bid Form. Once all proposals have been evaluated, PWS will return bid bonds to all respondents except for the top three (3) ranked firms.

E. PWS intends to complete its evaluation no later than Friday, February 8, 2013, at which time a list will be published showing the top ranked firm to be recommended to the PWS Board and a ranking list of all other respondents.

F. On Tuesday, February 12, 2013, PWS will approve the recommended top ranked firm or reorder the ranking list to select another firm. The Board will authorize the execution of a contract with the approved firm to commence with project implementation.

Proposals will only be considered from respondents who meet or exceed the criteria listed below. If you are unable to meet these minimum requirements, please do not submit a proposal since it will be deemed by PWS to be non-responsive and will not receive further consideration.

A. Firm must possess an overall bonding capacity of at least $1,000,000 (one million dollars).

B. Firm must disclose and certify any AMR installation-related litigation, contract non-compliance, or contract non-performance activities involving all prior clients within the past five (5) years.

C. Key personnel must have been actively involved in the development, management, and implementation of at least ten (10) AMR conversion projects. PWS will award additional points for demonstrated prior experience installing the Sensus FlexNet AMR system.

D. Key personnel must have been actively involved in the development, management, and implementation of at least five (5) AMR conversion projects of 10,000 meters or more.

E. Key personnel must have been actively involved in the electronic upload/download of mass meter change-out data with at least five (5) AMR conversion projects. PWS will award additional points for demonstrated prior experience integrating with "Black Mountain" utility billing software.

F. Firm must have successfully performed AMR conversions for a minimum of three (3) years under their current business entity name.

G. Personnel/crews must be fluent in speaking and reading/writing in English for customer service and safety issues.

Attendance at the scheduled pre-proposal conference is mandatory. Written minutes and/or notes will not be made available, therefore attendance is encouraged. The purpose of this conference is to clarify the contents of this RFP in order to prevent any misunderstanding of PWS's position. Any doubt as to the requirements of this RFP or any apparent omission or discrepancy should be presented to PWS at this conference or in writing no later than 12:00 p.m., on Wednesday January 30. PWS will then determine the appropriate action necessary, if any, and may issue a written response or addendum to the RFP. Oral statements or instructions will not constitute an addendum to this RFP.

General questions regarding submittal of the proposal shall be directed to Rachel Lee, Utility Engineer, at (850) 994-5129 or rlee@pacewater.org. All technical questions regarding the RFP project specifications shall be directed, in writing, to Damon Boutwell, General Manager, at dboutwell@pacewater.org or 4401 Woodbine Rd., Pace, Florida 32571.

This RFP does not commit PWS to award a contract to any firm or pay any costs incurred by any firm in the preparation of its response. It is the responsibility of all interested parties to examine the entire RFP package, seek clarification of any requirements, and verify all proposals for accuracy before submittal. Negligence in preparing a proposal confers no right of withdrawal or modification after the RFP due date and time. PWS reserves the right to accept or reject any or all proposals or any portion of a proposal received during this RFP process, to waive any informality in any proposal, to negotiate with all qualified firms after proposals are received, and to award a contract deemed to be in the best interest of PWS. PWS reserves the right to request additional information needed for clarification from any proposer. PWS may or may not elect to conduct oral interviews with a short-list of ranked firms. If PWS elects to conduct interviews, additional information may be requested from a proposer at that time. In all cases, PWS shall solely determine whether a firm's proposal has or has not satisfactorily met the requirements of this RFP.

Subject to the requirements of the State of Florida Administrative Code, Chapter 62-699, PWS may require that at least one (1) key member of Firm's project staff possess a State of Florida FDEP Level 2 or higher Water Distribution System Operator License or a Class C or higher Water Treatment Plant Operator License. In addition, one (1) key member of each conversion field crew may be required to possess a State of Florida FDEP Level 3 or higher Water Distribution System Operator License or a Class C or higher Water Treatment Plant Operator License unless the conversion is being performed by a licensed State of Florida Underground Utility Contractor or Plumbing Contractor. These licenses shall apply if any water distribution system operation or maintenance activity may affect drinking water quality or quantity.

The Firm is responsible for obtaining all necessary permits as may be required by the State, City or County.

A person or affiliate who has been placed on the convicted vendor list following a conviction for a public entity crime may not submit a bid on a contract to provide any goods or services to a public entity, may not submit a bid on a contract with a public entity for the construction or repair of a public building or public work, may not submit bids on leases of real property to a public entity, may not be awarded or perform work as a contractor, supplier, subcontractor, or consultant under a contract with any public entity, and may not transact business with any public entity in excess of the threshold amount provided in Section 287.017, for category two for a period of 36 months from the date of being placed on the convicted vendor list.

I. PROPOSAL REQUIREMENTS

Provide one (1) original and one (1) electronic PDF copy of your proposal, submitted in the format outlined below so all proposals can be uniformly evaluated. Proposals will be evaluated in light of the material and substantiating evidence presented and not based on what is inferred. The recommended maximum length of proposals is 15 to 20 single-sided pages, including graphics, charts, schedules and any other associated material, but excluding resumes and required documents. Resumes should be limited to key individuals and staff

directly involved in the implementation of the project and should not include those officers or managers expected to have limited or no participation or role in the conversion. Respondents must meet the minimum requirements stated herein to qualify for consideration. If you are unable to meet these minimum requirements, please do not submit a response since it will be deemed by PWS to be non-responsive.

A. Section 1 – Executive Summary
Provide a brief overview of your firm's experience with similar AMR conversion projects and why your firm is best suited to serve the PWS's system-wide deployment of Sensus FlexNet AMR technology.

B. Section 2 – Corporate Overview and Project Team
Provide general information on your firm, the key employees that will be assigned to this project, and similar background information for any subcontractor(s) that your firm intends to utilize. Provide a list of references in support of RFP criteria requirements, including full contact information and contact persons.

C. Section 3 – Project Management and I.T. Data Management Plan
Provide a detailed overview of how your firm intends to manage this project, including ongoing communication with PWS, progress reporting, public relations, problem resolution, quality assurance, and overall system commissioning. A deployment timeline and project schedule must be included. In addition, your response to this section should address how your firm will accomplish the electronic integration of meter change-out data between the PWS's "Black Mountain" utility billing system and your firm's electronic meter data management system. At a minimum, PWS requires the following meter change-out data be captured and delivered electronically to PWS for all 14,518 existing connections: address, install date, size, previous reading of old meter, current reading of new meter, previous meter and register serial numbers, new meter and AMR register serial numbers, new AMR transmitter serial number, GPS location, and digital photograph of the old meter and register face (to assist PWS with any potential billing disputes).

D. Section 4 – Required Documents
The following completed documents must be provided with your proposal:

1. Bid Form.
2. RFP Certification Page.
3. Bid bond payable to PWS for five percent (5%) of the bid amount (as shown on the Bid Form).
4. AMR-related litigation, contract non-compliance, or contract non-performance disclosure certification.
5. Professional licenses held and/or which could reasonably be required by this project.
6. Documentation of your firm's ability to provide a performance bond for at least $1,000,000 (one million dollars).

E. Section 5 – Proposal Cost
The Bid Form provided shall be fully completed for all items listed. Unit prices are to be all-inclusive of labor, materials, equipment, overhead/profit, and all other associated costs for the item. Prices quoted must be firm for a period of ninety (90) days from the proposal due date to allow sufficient time for examination of proposals, negotiations, and awarding of the contract. PWS reserves the right to negotiate all pricing with the successful firm and to eliminate any proposal cost item(s) that is cost prohibitive to this project.

II. Evaluation Criteria/Scoring

A. Section 1:	Executive Summary	10%
B. Section 2:	Corporate Overview and Project Team	20%
C. Section 3:	Project Management and I.T. Data Management Plan	30%
D. Section 4:	Required Forms	10%
E. Section 5:	Proposal Cost	30%

All proposals will be evaluated, scored, and ranked using the percentages shown above. Emphasis is being placed on performance capability to ensure the conversion will meet the AMR demands of PWS. Because of the high investment cost of the Sensus FlexNet AMR system, PWS requires proposers to ensure their performance will meet these expectations. Proposers should be careful not to sacrifice performance to ensure a low cost proposal, as pricing is only one of many factors under consideration.

A review committee will evaluate the proposals and score them in accordance with the RFP evaluation criteria. Firms will be ranked according to their scores and the review committee will recommend the top ranked firm to the PWS Board for approval. Upon approval, PWS will enter into final negotiations for a formal contract with the approved firm. The negotiations will include consideration of final compensation and other contract terms. If PWS is not able to negotiate a satisfactory contract with the approved firm, negotiations will be formally terminated and PWS may undertake negotiations with the next most qualified firm in ranked sequence until an agreement is completed or a determination is made to reject all firms on the list.

III. Scope of Work Description

A. The project must be completed within sixty (60) calendar days of PWS's Notice to Proceed and receipt of sufficient quantities of "Primary Equipment" to begin work. Additionally, the Firm must warrant its labor, materials, and installation for a minimum period of twelve (12) months following project completion as evidenced by final project approval by the PWS Board.

B. Although PWS will be responsible for purchasing "Primary Equipment", defined as Sensus iPERL and Omni water meters, transmitters, AMR modules, AMR infrastructure, meter boxes, security seals, etc., the Firm will be responsible for ordering, scheduling, handling, inventory, and storage of all "Primary Equipment". Storage facilities are available at the PWS's Warehouse, 4401 Woodbine Rd., Pace, Florida 32571. Bid pricing should reflect this additional management and oversight responsibility. The Firm will be responsible for purchasing "Secondary Equipment", defined as miscellaneous fittings, pipe, valves, turf grass/sod, landscaping and other necessary construction/paving materials, etc., required for a fully functional system.

C. The Firm will coordinate with PWS staff to obtain an electronic download of all utility billing data to import into the Firm's electronic meter data management system. PWS currently utilizes Black Mountain as its utility billing software company and it is the Firm's responsibility to ensure the accuracy of all data electronically imported/exported throughout the duration of the project so as not to disrupt PWS's existing meter reading and billing processes in any way. For each meter location, the Firm shall electronically capture the address, install date, meter size, previous meter reading (along with a digital photograph of the meter and register face), current meter reading, previous meter and register serial numbers, new meter and AMR register serial numbers, new AMR transmitter serial number, and GPS location. This data will then be delivered to PWS in an electronic format suitable for mass upload into PWS's billing system. Electronic uploads will take place one (1) time per week as coordinated with PWS's staff.

D. All work must follow the manufacturer's recommended installation procedures (Sensus MXU Installation Procedures attached).

E. Turn in all meters to PWS.

F. PWS will be responsible for mass media publicity and general notices to customers (e.g. bill stuffers). The Firm will be responsible for shutting off the water to each meter service as well as notifying each customer of the shutoff. The Firm's team will knock on the doors of residential customers as well as leave notifications on their doors. In the case of commercial customers (businesses, schools, hospitals, industrial, etc.) special efforts will be made to ensure minimum disruption to their water needs. PWS shall approve in writing the text of all door hangers, notices and other written communications with customers.

G. All work must be performed during normal business hours (Monday-Friday 6:30 a.m. to 5:00 p.m.). Work shall not be performed on nationally recognized holidays.

H. The Firm shall propose detailed scheduling and installation procedures to PWS for approval prior to scheduling or commencing installations. The procedures shall be designed to optimize the work of the field personnel and all other staff working on the project.

I. PWS must be given online access to the Firm's project management software in order to interactively track installation productivity, number of meters installed per day, substantial completion by route, anticipated completion date by route, and other key performance indicators.

J. The Firm shall assign qualified and responsible employees to each aspect of the requested work. All employees shall be presentable and act professionally during the course of the project. All employees shall wear a uniform shirt that identifies the Firm by name, as well as a prominently displayed photo identification badge. All employees shall be issued and carry a letter describing the project and work to be performed. The Firm must complete a background investigation on all employees prior to beginning work. A complete list of all employees and their duties must be submitted prior to beginning work.

K. The Firm shall operate/maintain all vehicles and equipment in a legal, safe, and responsible manner and have the Firm name, logo and contact information prominently displayed.

L. Before, or at the time of installation, the Firm shall inspect the existing water meter setting, including piping and shut-off valves. If the Firm determines that conditions are such that damage to the existing piping would result, the project manager shall so inform PWS, not attempt the installation until the site is inspected by an authorized PWS representative, and postpone installation at that site until PWS authorizes the Firm to proceed with the work.

M. The Firm is responsible for any damages that occur within twenty-four (24) inches on either side of the meter resulting from its installation efforts. Any damages incurred within this twenty-four (24) inch area will be promptly repaired at the Firm's expense. The Firm is not liable for damages outside of this twenty-four (24) inch area, on either side of the meter. In addition, and only with prior notice to PWS, the Firm is not liable for any pre-existing conditions such as leaks, faulty workmanship from previous projects, or faulty existing materials.

N. The Firm shall be responsible for replacing any meter, AMR unit, or appurtenances improperly set by its employees. The Firm shall correct any damage to couplings, threads, unions, or meters by use of improper tools or cross threading by an employee. The Firm shall be responsible for correcting any leaks at the valves, couplings, or service lines that could reasonably be attributed to the meter installation if reported by PWS or its customers within the project period.

O. The Firm is responsible for repairing any damage it causes to meter boxes and/or vaults that result from its installation efforts. Some areas of concrete, asphalt or other paved surfaces may need to be removed in order to gain access to meters. In this case, the Firm will restore the affected area to a condition as close as possible to the condition as it existed prior to installation and in conformance with standard PWS specifications. PWS meter boxes are Carson 1015-12 (with Solid Lid T.R. Hole) or Pentek 170115 (with Solid Lid T.R. Hole).

P. Should the Firm receive a call or complaint from a customer or PWS regarding installation, the Firm shall immediately log the call, including caller's name, address, account number if available, date, and time of call, nature of problem, and the action taken. Copies of all call logs shall be forwarded to PWS not less than weekly.

Q. Within sixty (60) days of contract award, the Firm must conduct a detailed audit of each 3" meter and larger to determine the appropriate site-specific scope of work. This audit shall include GPS coordinates, description of location, relevant digital photographs of meter site, detailed scope of work, replacement alternatives, and a fixed cost estimate for each meter site if the replacement is expected to exceed the RFP bid cost. This audit will then be reviewed by PWS to establish a prioritized action plan for which meters should be addressed first. This audit portion of the project is to be funded from the contingency allowance shown on the Bid Form and no work shall be performed without prior written approval from PWS.

R. All water meters installed in this contract shall be GPS mapped within sub-meter accuracy. The data delivered in a geo-database compatible with PWS's existing ESRI ArcGIS software system. GIS data, to include GPS positional data and meter attribute data, shall be provided in a spatially accurate format compliant with PWS's existing GIS schema, which will be provided. Coordinate data shall be field-collected with autonomous GPS readings and subsequently differentially corrected via post-processing. The Firm shall further refine positions through filtering and inspection to eliminate noise, problematic satellite geometry, and multi-path degradation. Point valve features shall be collected at an epoch of 1 second with a minimum occupation of 30 seconds. Specific parameters include:

1. Elevation Mask: 15 degrees above the horizon
2. Projected Coordinate System: State Plane, NAD 1983, Florida North, FIPS 0903ft projection
3. Satellites: >= 4
4. Position Dilution of Precision (PDOP): <6
5. Horizontal Dilution of Precision (HDOP): <4
6. Minimum number of raw positions collected: 30

In the event of obstructions and/or where a clear GPS position cannot be captured, a laser offset will be executed from a nearby permanent location and a comment placed in the

attribute table to indicate the position was an offset. At a minimum, and in addition to the database attribute requirements, the following coordinate data items shall be generated as a result of this process.

1. PDOP value
2. HDOP value
3. Correction Status
4. Date Recorded
5. Time Recorded
6. Total Positions
7. Filtered Positions
8. Horizontal Precision
9. Vertical Precision
10. Standard Deviation
11. .cor File Name
12. X-coordinate
13. Y-coordinate

Firm must plainly identify the proposed mapping accuracy and GPS survey instruments they intend to use, including manufacturer, model, and year, for collecting coordinate and observational data for this project. Identify software systems for data collection, post processing, filtering and editing positional data, including version.

IV. Standard Sequence of Operations

A. Verify address, meter number, and advise customer of work crew presence.
B. Inform customer that their water supply will be shut off for the change out.
C. Remove meter box lid and all soil and debris inside the meter box.
D. Verify number on meter and service order in electronic meter data management system to ensure they match.
E. Meter will be isolated from the up-stream line pressure by use of the inlet curb stop valve. If the curb stop does not exist or if the valve does not operate properly and the installation cannot be performed, PWS will be notified so corrective action can be taken
F. Remove the meter and protect the entrance/exit piping from contamination. Plugs or caps from the new meter shall be installed on the meter that was removed.
G. Discard old meter gaskets and install new meter and gaskets.
H. Install, program and activate the AMR Transmitter.
I. Install security seals on meter touch coupler and transmitter.
J. After new meter installation, open customer's hose bib. Then open the water supply slowly to avoid any surge or water hammer that might cause damage and flush service.
K. Confirm there are no leaks in the meter box and close hose bib.
L. Ensure the customer is aware that work is completed and service is restored.
M. Replace lid, remove debris, restore grassing/landscaping and leave customer's yard as it was found.

V. Existing Meter Inventory

Meter Size	Quantity
5/8" or ¾"	14,362
1"	33
1-1/2"	104
2"	14
3"	4
4"	1
Total Meters	**14,518**

NOTE: Existing meter inventory counts are based upon best available active and inactive utility billing record data and may differ from actual system totals. Final compensation shall be based upon the actual number of meters replaced and/or work completed.

VI. Proposal Certification Page

This form shall be executed and attached to the Bid Form.

The undersigned hereby declares and certifies the following:

A. My Firm has carefully examined and fully understands the project requirements as stated in the PWS's RFP document.

B. My Firm has not received, relied upon, or based our proposal on any verbal instructions contrary to the RFP documents and/or any subsequent written addenda.

C. My Firm has a corporate bonding capacity of at least $1,000,000 (one million dollars) and has included signed documentation from our bonding company as part of this RFP response.

D. My Firm has fully disclosed all AMR installation-related litigation, contract non-compliance, or contract non-performance activities involving all prior clients within the past five (5) years.

E. My Firm has enclosed a bid bond payable to PWS for five percent (5%) of the bid amount (as shown on the Bid Form).

NAME OF FIRM: _____

NAME AND TITLE OF AUTHORIZED SIGNATORY:

_____

SIGNATURE OF AUTHORIZED SIGNATORY:

_____

DATE OF RFP SUBMITTAL: _____

Reciprocity with Other Public Agencies

In the event this RFP process results in PWS awarding a contract for the system-wide deployment of AMR technology, PWS hereby allows other public agencies within the United States and Canada to replicate this RFP process (and the resulting contractual terms and conditions) in order to expedite a similar project elsewhere ("Reciprocity"). PWS extends this Reciprocity to any other municipal corporation, political subdivision, county, city, or similar

agency ("Agency") which desires to utilize the Successful Firm to implement a similar project with the Agency. Any such Agency shall make this Reciprocity determination independent of PWS and at its own discretion without any liability whatsoever to PWS. Any such Agency shall also be responsible for its own purchases and shall assume total responsibility/liability for its own project.

VII. BID FORM

Scope of Work	Quantity	Unit Price	Extended Price
Replace $^5/_8$" or ¾" meter with new AMR meter			
Replace 1" meter with new AMR meter			
Replace 1-½" meter with new AMR meter			
Replace 2" meter with new AMR meter			
Replace 3" meter with new AMR meter (same lay length)			
Replace 4" meter with new AMR meter (same lay length)			
Retrofit existing meter with AMR (for sizes 5/8" thru 1")			
Retrofit existing meter with AMR (for sizes 1-½" and larger)			
Removal and replacement of concrete/asphalt, including temporary patches (per square foot)			
Removal and replacement of turf grass/sod, including temporary patches (per square foot)			
Photography services (capture and electronically submit digital photo data per meter)			
Geo-coding services (capture and electronically submit GPS data per meter)			
Electronic transfer services (download/upload required record data per meter)			
Install new meter box and/or lid			
Install new AMR meter, meter box w/ lid, and new curb stop valve (new service ≤ 1")			
Project contingency to address unforeseen conditions	Allowance	$50,000	$50,000
TOTAL PROPOSAL COST			

NOTE: All new AMR water meters shall be Sensus iPERL or Sensus Omni. The project contingency allowance is for the sole use of the Pace Water System, Inc. and is not be expended without written authorization of PWS.

RadioRead

Installation Instructions

Model 520R – Pit Set Unit

IMPORTANT

The following information contains installation instructions for the Sensus Model 520R MXU.

Note: This installation sheet is only for installation of the Sensus Model 520R. For instructions on installing other AMR devices, please request and refer to the individual installation instruction for those devices.

GENERAL INFORMATION

The Model 520R MXU is designed for pit set environments and is available for both a single port and dual port operation. The unit allows for installation through the pit lid, however, when this is not an option, the design allows for under the lid installations. The unit can be installed with either a TouchCoupler connection or wire connection. Please refer to AMR-327 for compatibility.

DEFINITIONS

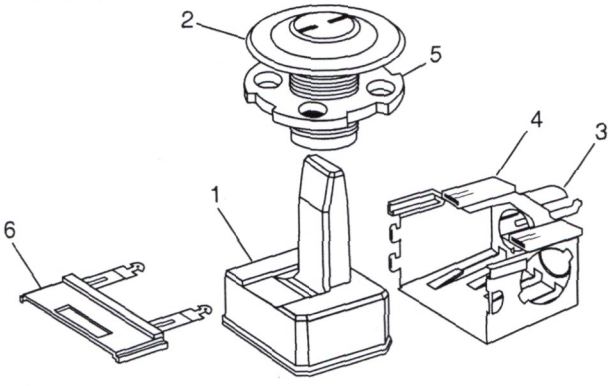

1. HDPE Radio
2. Pit Lid Housing
3. TouchCoupler TR/PL Adaptor (TouchCoupler enabled units only)
4. Boot
5. Pit Locking Nut
6. Boot Locking Clip

TOUCHCOUPLER - INSTALLATION INSTRUCTIONS

Step 1.
Disassemble 520 Unit

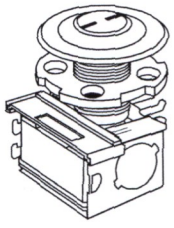

1. Disassemble the Model 520 unit to begin the installation procedure. Unlock the radio device by pressing down on the two tabs on the Boot Locking Clip facing the port side connections. Once the tabs are depressed, slide the Boot Locking Clip out until the Pit Lid Housing is released from the Boot.

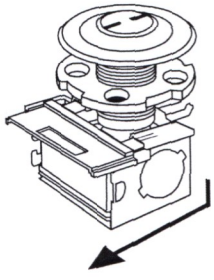

Boot Locking Clip - Push Down and Out

2. Slide the Pit Lid Housing off of the Boot and Boot Locking Clip assembly.

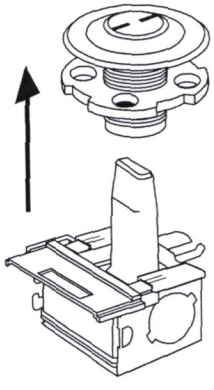

Pit Lid Housing slides off of HDPE Radio

3. Remove the Pit Locking Nut from the underneath of the Pit Lid Housing by turning the nut counter clockwise.

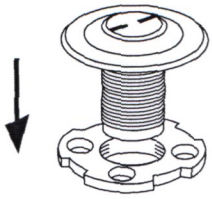

Pit Locking Nut Screws off of Pit Lid Housing

INSERTING THE PIT LID HOUSING

Step 2.

Place the Pit Lid Housing thru the pre-drilled hole in the top of the Pit Lid.

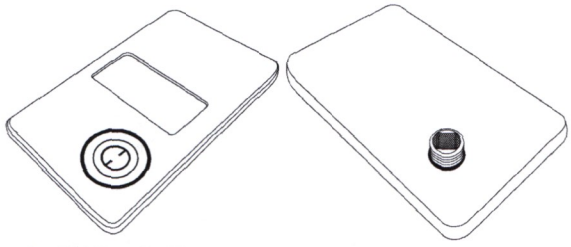

Pit Lid Housing Inserted Through Pit Lid (Top View) **Pit Lid Housing Inserted Through Pit Lid (Bottom View)**

SECURING THE PIT LID HOUSING

Step 3.

Place the Pit Locking Nut at the bottom of the Pit Lid Housing aligning the Pit Locking Nut with the shaft of the Pit Lid Housing. Tighten the Pit Locking Nut by turning clockwise until the unit is firmly secured against the bottom of the Pit Lid. (See picture below)

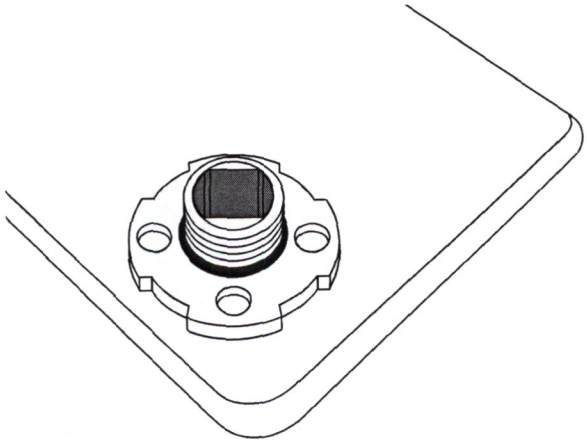

Securing the Pit Lid Housing to the Pit Lid

INSERTING THE RADIO DEVICE

Step 4.

1. Insert the HDPE Radio with Boot attached into the cavity of the Pit Lid Housing (See picture below)

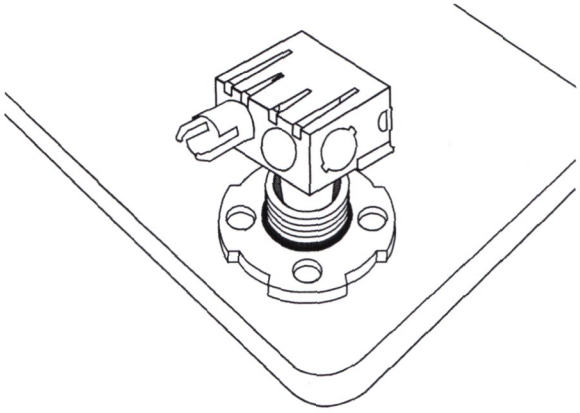

Insertion of the HDPE Radio and Boot into the Pit Lid Housing

2. Slide the Boot Locking Clip into the Boot while assuring alignment between the slot located on the bottom of the Pit Lid Housing and the Boot Locking Clip is achieved.

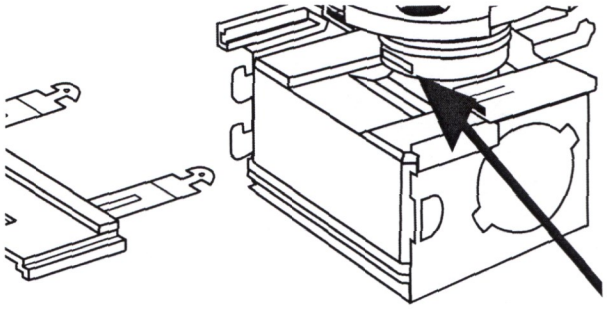

3. To secure the unit, slide the Boot Locking Clip into the Boot until the Boot Locking Clip rests in the slot located on the bottom of the Pit Lid Housing and the Boot Locking Clip is engaged and locked.

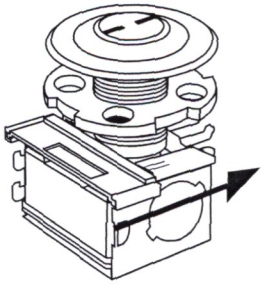

CONNECTING METERS TO THE RADIO

TouchCoupler Installation Instructions (Sensus Only)

1. Perform a TouchRead on TR/PL sensor to insure TouchRead to the encoder works.
2. Grasp the TR/PL sensor and place into Port 1 of the TouchCoupler TR/PL Adaptor until secured. (See picture below)
3. Repeat process into Port 2 if needed.

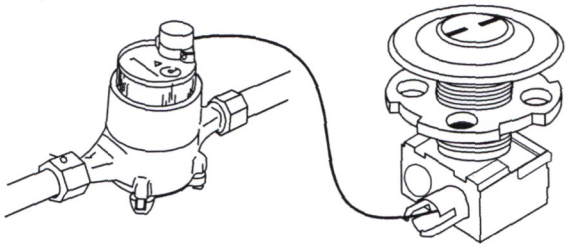

Wired Installation Instructions Recommended Tools and Materials

- 3M Scotchlok® UY-2 butt connector "gel-caps"
- 3M Scotchlok® E-9Y stepped jaw crimping tool with wire cutter
- Wire stripping tool
- Three conductor solid wire (Sensus specification)

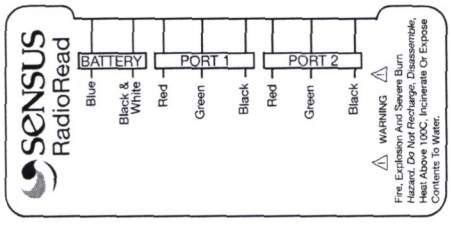

1. Strip approximately 2" off outer jacket of the encoder wire cable. The wire colors for each unit should be green, red and black.
2. The red, green and black wires must be gel-capped individually. Insert the corresponding wires, as indicated in the encoder wiring reference below, into the gel-cap with the color button of the gel-cap facing away.
   (This provides a better view of wire positions inside the clear plastic gel-cap enabling the installer to see the wires are completely and properly inserted).

Encoder wiring reference:

MXU Terminal	Sensus Register	Badger ADE	Neptune ProRead	Elster Encoder
Black	Black	Black	Green	Black
Red	Red	Red	Black	Green
Green	Green	Green	Red	Red

3. Using gel-cap pliers, squeeze the gel-cap. This will splice the two wires and release the waterproof gel to seal the connection. The splice can be checked by pulling gently on the gel-cap while holding the wires to be sure they are tight and secure. Repeat this process for the remaining two wire connections.

Note: If any of the wire connections are not being used they should be capped at the end with a gel-cap. This is to prevent wire damage due to water intrusion via wicking through the exposed wire ends.

Badger, Neptune and Elster registers must be wired directly to an MXU port and not through a MultiRead module connected to the 520R.

4. Coil and secure excess cable to the body of the meter or service line in a presentable manner.

CONNECTING METERS TO THE RADIO

Recommended Tools and Materials

- 1/2" Electrical Metallic Tubing (EMT)
- Conduit cutting tool
- Hammer

Under the Pit Lid Installation - Single Port

1. Using the 1/2" EMT, select a location for the conduit where the MXU's installed position will not interfere with the meter and allow the MXU to be located as high as possible inside the meter box. The MXU should be kept approximately 1" from the sides of the meter box and positioned so the meter register odometer remains visible for visual confirmation readings. Conduit mounting method calls for driving a length of conduit into the ground at the bottom of the meter box (if the bottom of the meter box does not have an opening sufficient for driving the conduit vertically into the ground below, a different mounting method may need to be developed).
2. After installation of the conduit, position the opening located in the pit locking nut over the conduit and set into place. Under the pit set installation is now complete.

Dual Port Installation - See Sensus representative for options

ACTIVATE RADIO

Note: if encoders or multiread modules are not connected to this radio, the radio will not activate.

Once all meters are connected, the radio must be activated in order for it to perform its function. To activate, using a TouchReader or Model 4090 AutoGun, perform a TouchRead on the Programming/TouchRead port (See picture below). To use TouchReader+ to activate, follow instructions below. During activation process, the radio will determine what is connected to this unit automatically. This may take up to 3-6 seconds depending if the unit is dual port capable and what type of encoders are connected.

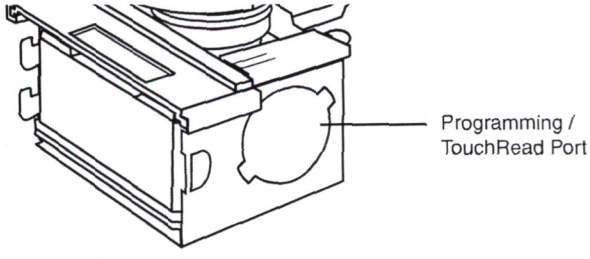

TouchReader+

1. If the TouchReader+ is not in Programmer Mode, press both Up and Down arrow simultaneously to cycle through the different modes.

3. Place the TouchReader+ Sensor on the Programming port of the radio and press the Read button. This will send a message to the radio to start the activation process. Keep TouchReader+ in place until complete – messages will appear on the screen.
4. Once complete, the TouchReader+ will beep once upon success and display the radio's status.

S-Or on Ion2oFF	or	ProG EnRbLEd

If unsuccessful, the radio will remain in an idle state and the TouchReader+ will beep twice and display the radio's status.

S-Or oFF IoFF2oFF	or	ProG IdLE

TouchReader

1. The TouchReader will beep once indicating that the radio acknowledged the TouchRead and is now detecting the type of register connection.
2. After waiting approximately 3 seconds, perform another TouchRead, if a read error occurs, the radio is still in detect mode. Repeat this step again in 3 more seconds if read error occurs.
3. If port detection is successful, the reading unit should provide either a TouchRead reading (Sensus only) or a single beep to indicate that the encoder is connected.

Note: TouchRead is not supported on Neptune registers.

AutoGun (ID type set to Factory ID – see AutoGun manual for instructions)

1. The AutoGun will beep and display the ID with a **"0"** at the end. This indicates that the radio acknowledged that TouchRead is in inactive/idle mode "0". This will start the detecting process.
2. After waiting approximately 3 seconds, perform another TouchRead, if a read error occurs, the radio is still in detect mode. Repeat this step again in 3 more seconds.
3. If successful detection, the AutoGun will display either a TouchRead reading (Sensus only) or
   - **ID: 1** – which means a TouchRead was attempted on an unsupported meter (Neptune).
   - **ID: 2** – which means that the port was configured for a meter type that supports TouchRead (Sensus only) but there was no response from the meter.
4. If unsuccessful detection, the TouchRead will start the activation process again. The ID on the AutoGun will display **"0"** similar to the step 1 above.

Note: Once the radio is activated and it detects the type of register connection, the only way to change its configuration to the correct type of register connection is to deactivate the radio using a programming tool and then re-activate the radio or use a programming tool to reprogram the port manually.

DEACTIVATE RADIO

TouchReader+

1. If the TouchReader+ is not in Programmer Mode, press both Up and Down arrow simultaneously to cycle through the different modes.
2. Once in Programmer Mode, pictured below, use the Up/Down arrows until Deact is displayed.
3. Place the TouchReader+ Sensor on the Programming port of the radio and press the Read button. This will send a message to the radio to start the deactivation process. Keep TouchReader+ in place until complete – messages will appear on the screen.
4. Once complete, the TouchReader+ will beep once upon success and display the radio's status.

S-Or oFF Ion2oFF	or	ProG IdLE

If unsuccessful, the radio will remain in an active state and the TouchReader+ will beep twice and display the radio's status.

FCC COMPLIANCE

This equipment has been tested and found to comply with the limitations for a Class B digital device, pursuant to Part 15 of the FCC rules. These limits are designed to provide reasonable protection against harmful interference in a residential installation. This equipment generates uses and can radiate radio frequency energy and, if not installed and used in accordance with these instructions, may cause harmful interference to radio communications. However, there is no guarantee that interference will not occur in a particular installation. If this equipment does cause harmful interference to radio and television reception, which can be determined by turning the equipment off and on, the user is encouraged to try to correct the interference by one or more of the following measures:

- Reorient or relocate the receiving device
- Increase the separation between the equipment and receiver
- Connect the equipment into an outlet on a circuit different from that to which the receiver is connected
- Consult the dealer or an experienced radio/TC technician

Warning: No party shall make any modifications or changes to the Sensus Model 510R MXU (the equipment) without express written consent of Sensus Metering Systems. Doing so could result in the equipment becoming non-compliant with the requirements of the Federal Communications Commission Rules CFR47 part 15 and could void the user's authority to operate the equipment.

AUTHORIZED SENSUS DISTRIBUTOR

SENSUS

P.O. Box 487 | 450 North Gallatin Avenue
Uniontown, PA 15401 USA
T: 1-800-638-3748
F: 1-800-888-2403
www.sensus.com/water
h2oinfo@sensus.com

Meter Change-Out Program

	Utility Solutions of America	Utility Services Assoc.	Utility Metering Solutions
Executive Summary 10%	8	10	9
Corporate Overview and Project Team 20%	16	18	18
Project Mgt. and IT Data Mgt. Plan 30%	29	30	30
Required Forms 10%	10	10	10
Proposal Cost 30%	30	24	23
Evaluation Totals	93	92	90
Proposal Costs	$ 541,369.50	$ 680,908.50	$ 686,056.00

City of Callaway Board of Commissioners
Agenda Item Summary

December 9, 2014

Final Reading/Public Hearing – Ordinance No. 947 – Gulf Power Franchise

1. PLACED ON AGENDA BY:

J. Michael Fuller, City Manager

2. AGENDA:

PRESENTATION ☐
PUBLIC HEARING ☐
CONSENT ☐
REGULAR ☒

3. IS THIS ITEM BUDGETED (IF APPLICABLE)?: *YES* ☐ *NO* ☐

N/A

4. BACKGROUND: ***(WHY, WHAT, WHO, WHERE, WHEN, HOW, & IDENTIFY ALL ATTACHMENTS)***

The current franchise agreement granted to Gulf Power will expire December 31, 2014. The electric utility franchise was granted to Gulf Power pursuant to Ordinance No. 600, which provided for a franchise fee of 6% of gross revenue from collected monthly service. The Ordinance was valid for a fifteen (15) year term. Please note, that the franchise fee provision will not be waived by Gulf Power unless specific action is taken by the City to relinquish further payment.

City staff has been in contact with Gulf Power about the terms of the franchise agreement. As a result, another fifteen (15) year franchise term to be effective January 1, 2015 is being proposed. Ordinance No. 947, a copy of which is enclosed, specifies a 15 year term and further considers a franchise fee of six percent (6%) of gross receipts. The 6% fee appears to be the typical amount most other local municipalities have adopted. (Cities of Parker, Springfield, Lynn Haven and Panama City have a franchise fee of 6%. Parker granted a 30 year franchise in '13.)

In regards to the revenue proceeds from electric utility franchise fees, the City budgeted $705,000 from Gulf Power for Fiscal Year 2015. In Fiscal Years 2013 and 2014 approximately $650,000 annually was received.

Attachments

- Ordinance No. 947

5. REQUESTED MOTION/ACTION:

Staff recommends that the Commission approve Ordinance No. 947 granting an electric utility franchise to Gulf Power for a term of fifteen years.

ORDINANCE No: 947

AN ORDINANCE OF THE CITY OF CALLAWAY, FLORIDA, GRANTING TO GULF POWER COMPANY, A CORPORATION, ITS SUCCESSORS AND ASSIGNS, THE RIGHT AND FRANCHISE TO MAINTAIN AND OPERATE AN ELECTRIC PLANT AND AN ELECTRIC TRANSMISSION AND DISTRIBUTING SYSTEM IN THE CITY OF CALLAWAY AND TO CONSTRUCT, MAINTAIN, OPERATE AND EXTEND ELECTRIC TRANSMISSION AND DISTRIBUTION LINES IN THE STREETS AND PUBLIC PLACES OF SAID CITY; AND PROVIDING THE TERMS AND CONDITIONS OF SUCH GRANT; PROVIDING FOR GRANT OF FRANCHISE PRIVILEGE, PROVIDING FOR RIGHT TO OPERATE; PROVIDING FOR TERM OF FRANCHISE; PROVIDING FOR FRANCHISE CONSIDERATION; PROVIDING FOR TRANSFERABILITY; PROVIDING FOR FORFEITURE OF FRANSHISE; PROVIDING FOR TERMINATION OF GRANT BY INSOLVENCY OR BANKRUPTCY; PROVIDING FOR SEVERABILITY; PROVIDING HOLD HARMLESS AGREEMENT; PROVIDING FOR RATES, RULES AND REGULATIONS; PROVIDING FOR REVIEW AND REVISION OF FRANCHISE PROVISIONS; PROVIDING FOR SUCCESSORS AND ASSIGNS; PROVIDING FOR PROPER OPERATION; PROVIDING FOR INTERRUPTION OF SERVICE; PROVIDING FOR METERING OF SERVICE; PROVIDING FOR EXCAVATION, MAINTENANCE AND RESTORATION; PROVIDING FOR SURRENDER OF RIGHTS; PROVIDING FOR WRITTEN ACCEPTANCE BY GRANTEE; PROVIDING FOR THE REPEAL OF ALL ORDINANCES IN CONFLICT HEREWITH AND PROVIDING AN EFFECTIVE DATE.

WHEREAS, on October 26, 1999, the City of Callaway (the "City") adopted Ordinance No. 600 (the "Franchise Agreement"), which granted a franchise to the Gulf Power Company ("Gulf Power") to provide electric service to the City; and

WHEREAS, the City finds it in the public interest to ensure that all areas within its limits are adequately provided with high-quality and reliable electric service; and

WHEREAS, the City finds it in the public interest to provide that any entity granted authority to use the public rights-of-way for the provision of electricity shall, in spirit of mutual trust, from time to time, review and negotiate the rights and obligations of the provider of electricity within the boundaries of the City, because of the overriding public health, safety, and welfare considerations associated with the provision of this service; and

WHEREAS, the City finds it in the public interest to retain control over the use of public right-of-way by providers of electricity to ensure against interference with the public convenience, to promote aesthetic considerations, to promote planned and efficient

use of limited right-of-way space and to protect the public investment of right-of-way property; and

WHEREAS, the City finds that the granting of this franchise is the best means of assuring that the above-described interest of the City are promoted.

BE IT ORDAINED BY THE CITY OF CALLAWAY, FLORIDA:

SECTION 1. Grant of Franchise Privilege: In consideration of the benefits that will accrue to the City and the inhabitants thereof, Gulf Power, a corporation under the laws of the State of Florida, its successors and assigns, hereinafter sometimes referred to as the Grantee, is hereby given, granted and vested with the right, authority, easement, privilege and franchise to construct, erect, suspend, install, extend, renew, repair, maintain, operate and conduct in said City a plant or plants and system for the generation, transmission and distribution of electric energy for all purposes whatsoever.

SECTION 2. Right to Operate: The said Grantee, its successors and assigns, is hereby further given, granted and vested with the right, authority, easement, privilege and franchise to construct, erect, suspend, install, extend, renew, repair, maintain, operate and conduct in said City a system of poles, towers, conduits, cables, conductors, transforming stations, fittings, appliances and appurtenances necessary or desirable to the transmission, distribution or sale of electric energy for all purposes whatsoever, in, over, under, along, upon and across all streets, avenues, alleys, ways, bridges, and public places in said City, as they now exist or as they may hereafter be laid out or extended within the present and future limits of said City, together with the further right, privilege and franchise to construct, erect, suspend, install, extend, renew, repair and maintain and operate a system of poles, towers, conduits, cables, wires, conductors, transforming stations, generating stations, fittings and all appliances and appurtenances necessary or desirable to the generation and transmission within, unto, through, over and beyond said City and to the furnishing, supplying and distributing to said City and the inhabitants and corporations both within and beyond the limits thereof, of electric energy for lighting, heating, power and all other purposes for which electric energy may be used now or hereafter, and for the purpose of extending its lines and furnishing electric energy beyond the limits of said City. Grantor retains the right to purchase or generate electric power for its own use but not for sale. The electric system, facilities, and associated equipment and vehicles shall be located or relocated, erected or operated so as not to unreasonably interfere with vehicular and pedestrian traffic over, along and across said public rights-of-way, streets, alleys, bridges and public places and with reasonable egress and ingress to abutting and adjoining property.

SECTION 3. Term of Franchise: The franchise granted, by this ordinance shall exist and continue for a period of fifteen (15) years.

SECTION 4. Franchise Consideration: As a further consideration for the granting of the rights, privileges and franchises hereby granted, the Grantee, its successors and assigns, shall pay to the City within thirty (30) days after the first day of

each month a franchise fee of six percent (6%) of Grantee's revenue from the furnishing of electric service to customers served under all of its rate schedules within the corporate limits of the City collected during the preceding month. The percentage of such revenue to be collected by grantee and paid to the City as a franchise fee may be changed by the City from time to time, by ordinance, at intervals of no less than every three (3) years, provided that the percentage shall in no event exceed that permitted by law.

SECTION 5. Transferability: The grantee shall not sell or transfer any portion of its plant or system to another, nor transfer any rights under this franchise to another without grantor's prior approval. No such sale or transfer shall be effective until the vendee, assignee or lessee has filed with the grantor an instrument, duly executed, reciting the fact of such sale, assignment or lease, accepting the terms of the franchise and agreeing to perform all the conditions thereof. The grantor will not unreasonably withhold its consent to the transfer of this franchise.

SECTION 6. Forfeiture of This Franchise: Failure by the Grantee to comply in any substantial respect with any of the provisions, terms or requirements of this Ordinance shall be grounds for forfeiture of this franchise, but no such forfeiture shall take effect if the reasonableness and propriety thereof is timely protested and satisfactorily addressed or until a court of competent jurisdiction shall have found that the Grantee has failed to comply in a substantial respect with any of the provisions, terms or requirements of this Ordinance. Both the Grantor and Grantee reserve the right of appeal of such court findings. The Grantee shall have six (6) months after the final determination of the questions to make restitution or make good the default or failure before forfeiture shall result. The Grantor, at its discretion, may grant additional time to the Grantee for restitution and compliance as the necessities of the case may require.

SECTION 7. Termination of grant by insolvency or bankruptcy of grantee: In the event of a final adjudication of bankruptcy of the grantee, the grantor shall have full power and authority to terminate, revoke and cancel any and all rights granted under the provisions of this ordinance.

SECTION 8. Severability: Should any section or provision of this Ordinance or any portion hereof be declared by a court of competent jurisdiction to be invalid, such decision shall not affect the validity of the remainder, as a whole or any part hereof, other than the part declared to be invalid; except that the entire agreement is invalidated if the portion declared invalid is, in the judgment of the Grantor, an essential part of this ordinance.

SECTION 9. Hold Harmless: The Grantor shall in no way be liable or responsible for any accident or damage which may occur due to the construction, location, relocation, operation or maintenance by the Grantee of said poles, towers, conduits, wires, cables and other appliances, equipment and vehicles subject to the terms and conditions of this franchise. The grantee hereby agrees to indemnify the grantor and to hold it harmless against any and all liability, loss, cost, damage or any expense

connected therewith including a reasonable attorney's fee incurred in the defense of any type of court action related hereto, which may accrue to the Grantor by reason of negligence, default or other misconduct of the Grantee in its construction, location, relocation operation or maintenance of the facilities, vehicles or equipment of the electric system subject to this franchise.

SECTION 10. Rates Rules and Regulations:

(a) All rates for electrical service and the rules and regulations governing the receipt of said service within the Grantor limits, established by the Grantee from time to time, shall be reasonable and shall be at all times subject to such public regulations as may be provided by law. The Grantee recognizes its obligation to provide electric energy and power service within the City on reasonable terms and conditions as just, reasonable and nondiscriminatory rates to all who request said service during the term of this franchise and thereafter, as required by law or by duly constituted public regulatory body.

(b) The Grantee agrees by its acceptance of this franchise to file with the City Clerk or City Manager or his successor by the first anniversary date of this franchise, a complete set of rules and regulations and a complete set of tariffs or rate schedules under which electric service is provided within the City and to file in writing annually any revisions of rules, regulations and rates that have been adopted since the previous annual filing. Grantee shall also furnish the City Manager a copy of each of its annual reports to its stockholders.

(c) Grantor may, at its option and at its expense, and upon reasonable notice to Grantee, examine the records of operations and accounting files, books and records to the extent that such records relate directly to the calculation of the franchise fee payment to the Grantor, as provided herein and to proper performance of other terms of this franchise. The examination of such books, accounts, records or other materials necessary for determination of compliance with the terms, provisions and requirements of this franchise shall be during regular hours of business of the Grantee and at the corporate offices of the Grantee.

(d) Should, during the term of this franchise, the scheme of public regulation existing as of the date of this franchise be changed substantially or such that the grantee is no longer subject to regulation or that the grantor obtains the jurisdiction and authority to regulate the rule and rates of the grantee, the parties hereto agree to meet, within sixty (60) days following the change in regulation, in order to negotiate a mutually satisfactory arrangement relating to regulation of the rules and rates to be imposed on the customers located within the franchise area; provided however, that the rules and rates in effect as of the date of change in the method of regulation shall remain in effect until such time as a mutually satisfactory arrangements can be developed and agreed upon.

SECTION 11. Review and Revisions of Franchise Provisions: With the exception of the provisions of Section 3 concerning the term of this franchise and of Section 4 concerning the franchise fee, the City and grantee may from time to time

request of either party review any or all of the other provisions of this Ordinance and by mutual agreement revise any such provision, or add any additional provisions that may be appropriate.

SECTION 12. [RESERVED]

SECTION 13. Successors and Assigns: Whenever in this Ordinance either the City or the Grantee is named or referred to, it shall be deemed to include the respective successor, successors or assigns of either, and all rights, privileges and obligations herein conferred shall bind and inure to the benefit of such successor, successors or assigns of said Grantor or of the Grantee.

SECTION 14. Proper Operation: The poles, towers, conduits, cables, conductors, transforming stations, generating stations, fittings, appliances and appurtenances shall be constructed in accordance with good engineering practices and so as not to unreasonably interfere with the proper use of the streets, avenues, alleys, ways, bridges, and public places in the City and shall be maintained in reasonably good condition and repair. Failure to restore service within a reasonable time shall be material breach of this franchise. Any substantial outage caused by the neglect or willful act of grantee shall be a material breach of this franchise.

SECTION 15. Interruption of Service: In the event the supply of electric energy should be interrupted or fail by reason of accident or any cause beyond the control of the Grantee, the Grantee shall, at its own expense, restore the service within a reasonable time and such interruption shall not constitute a breach of this franchise nor shall the Grantee be liable for any loss or damage by reason of such interruption or failure.

SECTION 16. Metering of Service: The Grantee shall install and maintain meters for measuring current and shall have free access to the premises of the consumer, from time to time, for the purpose of reading, repairing, testing and maintaining the meters and appurtenances. Such meters shall remain the property of the Grantee.

SECTION 17. Excavation, Maintenance and Restoration: Whenever the Grantee shall cause any opening or alteration to be made in any of the streets, avenues, alleys, ways, bridges, or public places of the City for the purpose of installing, maintaining, operating or repairing any poles, towers, conduits, cables or other appliances, the work shall be completed at Grantee's expense within a reasonable time and the Grantee shall upon the completion of such work restore such portion of the streets, avenues, alleys, ways or other public places to as good condition as it was before the opening or alteration was so made and will promptly remove any debris.

SECTION 18. Surrender of Rights: As a further consideration for the granting of the rights, privileges and franchises granted hereby, the Grantee surrenders all rights, privileges and franchises heretofore granted by the City or the State of Florida for any of the purposes stated in Section 1 and 2 of this Ordinance and now enjoyed by Grantee in

the City, provided, however, that such surrender shall not be effective unless and until this Ordinance shall be finally adopted and in effect and the rights, privileges and franchises granted hereby shall be validly in force and effect.

SECTION 19. Written Acceptance by Grantee: The Grantee, its successors or assigns, shall, within thirty (30) days after this Ordinance shall take effect; file a written acceptance of the Ordinance with the City Clerk of the City.

SECTION 20. Repealing Clause: All ordinances or parts of ordinances in conflict herewith are and the same are hereby repealed to the extent of such conflict.

SECTION 21. Effective Date: This Ordinance shall be effective on the 1st day of January, 2015.

PASSED and ADOPTED by the City Council of the City of Callaway, Florida on the ___day of _____, 2014.

CITY OF CALLAWAY, FLORIDA

BY: _____
Thomas W. Abbott, Mayor

ATTEST:

_____
City Clerk

ACCEPTANCE OF FRANCHISE

KNOW ALL MEN BY THESE PRESENTS that Gulf Power Company, a Florida Corporation, hereby accepts the franchise agreement offered by the City of Callaway pursuant to its Ordinance No. _____.

IN TESTIMONY WHEREOF, Gulf Power Company has caused its duly authorized officers to execute this instrument for it and as its act and deed on this ___ day of _____, 2014.

GULF POWER COMPANY

By: _____
Its: President

ATTEST:

_____
Its: Secretary

City of Callaway Board of Commissioners
Agenda Item Summary

December 9, 2014

First Reading of Ordinance #948 – Imposing Fees for Lien Searches

1. PLACED ON AGENDA BY:

J. Michael Fuller, City Manager

2. AGENDA:

- PRESENTATION ☐
- PUBLIC HEARING ☐
- CONSENT ☐
- OLD BUSINESS ☐
- REGULAR ☒

3. IS THIS ITEM BUDGETED (IF APPLICABLE)?: YES ☐ NO ☐

N/A

4. BACKGROUND: (WHY, WHAT, WHO, WHERE, WHEN, HOW, & IDENTIFY ALL ATTACHMENTS)

Due to the high volume of lien search request coming into utility billing and the amount of time it takes a customer service representative to process these requests, city staff is requesting the Commission to consider imposing fees for lien searches.

ATTACHMENT: Draft Ord. #948
Request for Lien Search Form
Example 1
Example 2

5. REQUESTED MOTION/ACTION:

Staff recommends that the City Commission approve the First Reading of Ordinance #948 – Imposing Fees for Lien Searches and schedule a Final Reading/Public Hearing.

DRAFT

ORDINANCE No. 948

AN ORDINANCE OF THE CITY OF CALLAWAY IMPOSING FEES FOR LIEN SEARCHES; IMPOSING FEES FOR RUSH LIEN SEARCHES; AUTHORIZING AMENDMENTS TO SAID FEES TO BE ESTABLISED BY RESOLUTION; PROVIDING FOR SEVERABILITY; REPEALING ALL ORDINANCES OR PARTS OF ORDINANCES IN CONFLICT HEREWITH AND PROVIDING AN EFFECTIVE DATE.

WHEREAS, pursuant to Article VIII, Section 2 of the Florida Constitution, and Chapter 166, Florida Statutes, the City of Callaway, Florida (hereinafter "City") has the power and the authority to enact ordinances and regulations for valid governmental purposes that are not inconsistent with general or special law; and

WHEREAS, the City frequently receives requests for lien searches from title companies, banks, financial institutions, attorneys, and other entities and individuals for which the City incurs administrative time and costs processing the requests; and

WHEREAS, when a lien search request is received by the City, staff time from multiple departments is required, including the City Clerk's office, the finance department and the utility billing department; and

WHEREAS, to offset the increasing demand of staff time and resources, the City recommends imposing a charge for processing lien searches regarding real property located within the City limits of Callaway.

NOW, THEREFORE, BE IT ENACTED by the people of the City of Callaway, Florida that:

SECTION 1. The following fees are hereby imposed for lien requests submitted to the City:

Lien Search	$50.00 (7-14 Days Response Time)
Rush Lien Search	$100.00 (3 Business Day Response Time)

DRAFT

Each lien search provides outstanding municipal debts assessed on a specific city property through a utility account, code enforcement or nuisance abatement case, special assessment, and/or open building permit. Should there be an outstanding municipal debt; payments and release of liens are to be processed by the utility billing office.

SECTION 2. AMENDMENTS. Any amendments to the lien search fees established in this Ordinance may be made by future Resolution of the City Commission.

SECTION 3. SEVERABILITY. The provisions of this Ordinance are severable; and if any section, subsection, sentence, clause or provision is held invalid by any court of competent jurisdiction, the remaining provisions of this Ordinance shall not be affected thereby.

SECTION 4. REPEALER. All ordinances, resolution or parts thereof, including but not limited to Chapter 27900, Laws of Florida (1951), as amended (which became a City ordinance pursuant to and upon enactment of Section 166.021(5), Florida Statutes), which are inconsistent or in conflict herewith are hereby repealed and of no further force and effect.

SECTION 5. EFFECTIVE DATE. This Ordinance shall be in force and take effect immediately upon its passage and adoption by the City Commission.

DULY PASSED AND ENACTED by the City Commission of the City of Callaway, Florida this ___ day of _____, 2014.

CITY COMMISSION OF THE CITY OF CALLAWAY, FLORIDA

_____

(SEAL) Thomas W. Abbott, Mayor

ATTEST:

_____

Sandra B. Hirth, City Clerk

DRAFT

(850) 871-6000
Fax (850) 871–2444
www.cityofcallaway.com

REQUEST FOR LIEN SEARCH

Date: ______________________________

Rush: ☐ **$100.00** per Parcel ID Number in **(3)** business days

Regular: ☐ **$50.00** per Parcel ID Number **(7) to (14)** business days

Duplicate Request: ☐ **$5.00** per Parcel ID Number

••

Company Name: ____

Address: ____

City: _______________________ State: __________ Zip Code: ________

Phone: (_____) ____________________ Fax: (_____) ____________________

Email Address: ____

••

Owner(s) Name: ____

Property Address: ____

Parcel ID Number: ____

Each lien search provides outstanding municipal debts assessed on a specific city property through a utility account, code enforcement or nuisance abatement case, special assessment, and/or open building permit. Should there be an outstanding municipal debt; payments and release of liens are to be processed by the Utility Billing office.

example 1

City of Boca Raton

CITY HALL • 201 WEST PALMETTO PARK ROAD • BOCA RATON, FLORIDA 33432-3795 • PHONE: (561) 393-7700
(FOR HEARING IMPAIRED) TDD: (561) 367-7046
SUNCOM: (561) 922-7700
INTERNET: www.myboca.us

Lien Search Fee

As of October 1, 2011, the fee charged by the City of Boca Raton for searching City records for outstanding bills, special assessments, pending or certified liens is **$150.00** per property to be searched. All lien search requests must include a check payable to the City of Boca Raton to cover the fee for each request made. The $150.00 fee is for normal requests where the projected property closing date is at least ten business days from the date the City receives the request.

For expedited service, the City will process the lien request within 24 hours of receipt in the Financial Services Department, and results will be faxed prior to mailing. The fee for this service is **$300.00** payable in advance.

Faxed requests are not accepted.

Information to be included in the lien search request:

1. Property folio number as listed in the records of Palm Beach County, Florida.
2. Legal description of the property including the street address.
3. Name of current property owner.
4. Name of person or firm requesting the lien search.
5. A stamped self-addressed return envelope.
6. The projected closing date of the property transaction.

All lien requests should be mailed or delivered to:

Financial Services Department, Room 160
City of Boca Raton
201 W. Palmetto Park Road
Boca Raton, Florida 33432

If you have any questions, please call (561) 393-7729.

Note: This property search does not include a review of open building or other permits. If you require this information, please call 561-393-7930.

example 2

CITY OF HOLLYWOOD, FLORIDA
LIEN SEARCH REQUEST FORM

QUESTIONS ABOUT THIS LIEN SEARCH REQUEST FORM?
Please call Customer Service at (954) 921-3246 for assistance.

IMPORTANT NOTICE

The requesting party assumes all responsibility for the accuracy and completeness of the property description information provided to the City, including the property identification number, property address, and legal description. Note that property identification numbers can have more than one corresponding address, and all relevant addresses must be listed.

Date of This Request:	
Requesting Party's Name:	
Company Affiliated With:	
Address:	
City, State, Zip Code:	
Best Daytime Phone Number to Reach You:	
Fax Number:	
Email Address:	
How do you want the City's Lien Search report delivered to you?	☐ **Mail it** ☐ **Fax it** ☐ **Email it**
Property Address to be Searched:	
Property Identification Number:	
Legal Description:	
Owner of Record:	
File Number:	
Payment Method:	☐ **Check** ☐ **Online**
Check # or Online Transaction ID:	

SIGNATURE

I hereby request that the City conduct a search of outstanding liens and assessments on the property cited above. I have paid the non-refundable lien search fee of $100.00. I assume all responsibility for the accuracy and completeness of the property description information I have provided above. I understand that performance of the lien search by the City of Hollywood will not relieve the requesting party from the responsibility of searching the public records of Broward County, Florida, for any and all liens or other documents recorded by the City of Hollywood, Florida against the property and/or property owner.

Signature: _____ **Printed Name:**

You may submit your completed Lien Search Request Form in one of three ways:

1. ***Mail it***, along with your check or money order for $100.00 made payable to the City of Hollywood to: Treasury Services Division/Collections and Liens, City of Hollywood, P.O. Box 229045, Hollywood, FL 33022-9045. The City reserves the right to release the results of the lien search contingent on bank clearance of payments made by check.

2. ***Hand deliver it*** to the Treasury Services Division/Collections and Liens, City of Hollywood, 2600 Hollywood Boulevard, Room 103, Hollywood FL 33020. Pay the $100.00 lien search fee by cash, check/money order, or credit card at the Payment Center window. The City reserves the right to release the results of the lien search contingent on bank clearance of payments made by check.

3. ***Pay online*** by going to the City's website at www.hollywoodfl.org and selecting "Payment Center" on the right menu. Click "Pay for a Lien Search" option. Then email your completed form to liensearch@hollywoodfl.org or fax it to (954) 921-3056.

PLEASE NOTE THAT YOU MUST SUPPLY THE PROPERTY IDENTIFICATION NUMBER FOR EVERY LIEN SEARCH THAT YOU REQUEST. You must provide the property identification number on the City's Lien Search Request Form so the City is certain of the exact parcel you wish searched. The property identification number is also known as the "folio" or "parcel" number.

If you do not know the property identification number for a property, you can go to the Broward County Property Appraiser's website at www.bcpa.net and conduct a "Property Search" by either the owner name or property address. Once the page for the property is accessed, you will find the property identification number located in the top right hand corner of the page (it is shown as "ID #").

If you want to pay for a lien search online, the property identification number serves as your ACCOUNT NUMBER which you are required to enter on the screen in order to complete payment.

City of Callaway Board of Commissioners
Agenda Item Summary

December 9, 2014

First Reading – Ordinance No. 949 – Nuisance Abatement Assessments Levy and Collection

1. PLACED ON AGENDA BY:

J. Michael Fuller, City Manager

2. AGENDA:

PRESENTATION ☐
PUBLIC HEARING ☐
CONSENT ☐
REGULAR ☒

3. IS THIS ITEM BUDGETED (IF APPLICABLE)?: *YES* ☐ *NO* ☐

N/A

4. BACKGROUND: ***(WHY, WHAT, WHO, WHERE, WHEN, HOW, & IDENTIFY ALL ATTACHMENTS)***

If adopted by the Commission, Ordinance No. 949 will amend the existing Ordinance No. 876, the capital improvement and essential services assessment ordinance, to allow assessments to a single parcel of property when public nuisance are abated by the City.

Attachments

- Ordinance No. 949

5. REQUESTED MOTION/ACTION:

Staff recommends that the Commission approve the first reading of Ordinance No. 949 and schedule the date for a public hearing.

ORDINANCE NO. 949

AN ORDINANCE OF THE CITY OF CALLAWAY, FLORIDA, AMENDING ORDINANCE NO. 876 OF THE CITY RELATING TO THE LEVY AND COLLECTION OF SPECIAL ASSESSMENTS; DEFINING CAPITAL ASSET AND CLARIFYING DEFINITIONS OF "CAPITAL COST" AND "CAPITAL IMPROVEMENT"; CLARIFYING THAT ASSESSMENTS MAY BE IMPOSED UPON A SINGLE PARCEL WHERE THAT PARCEL IS PREDOMINANTLY BENEFITTED, AS IN THE CASE OF THE CAPITAL COST TO ABATE A PUBLIC NUISANCE; REPEALING ORDINANCES IN CONFLICT; AUTHORIZING CODIFICATION; AND PROVIDING AN IMMEDIATELY EFFECTIVE DATE.

NOW THEREFORE, BE IT ORDAINED BY THE CITY COMMISSION OF THE CITY OF CALLAWAY, FLORIDA:

SECTION 1. From and after the effective date of this Ordinance, Section 1.01 of Ordinance 876 of the City of Callaway, Florida is amended to read as follows (deleted text ~~stricken~~, new text **bold and underlined**):

SECTION 1.01. DEFINITIONS. When used in this Ordinance, the following terms shall have the following meanings, unless the context clearly requires otherwise:

"**Annual Assessment Resolution**" means the resolution described in Section 2.08 hereof, approving an Assessment Roll for a specific Fiscal Year.

"**Assessment**" means a special assessment imposed by the Commission pursuant to this Ordinance to fund or expedite recovery of the Capital Cost of Capital Improvements orthe Service Cost of Essential Services. The term "Assessment" and the reference to non-ad valorem assessments herein means those assessments which are not based solely upon millage and which can become a lien against a homestead as permitted by Article X, Section 4 of the

Florida Constitution.**"Assessment" may include Capital Costs or Service Costs, or any combination of those costs, associated with the review, planning, investigation, analysis, permitting, notice, enforcement, remediation, improvement, provision of services, demolition or removal, or any combination of those, to abate a public nuisance.**

"**Assessment Area**" means any of specific areas created by resolution of the Commission pursuant to Section 2.02 hereof, that specially benefit from Capital Improvements orEssential Services.

"**Assessment Coordinator**" means the City Manager or such person's designee.

"**Assessment Roll**" means the special assessment roll relating to Capital Improvements orEssential Services containing the information specified in Section 2.04 and approved by a Final Assessment Resolution or an Annual Assessment Resolution pursuant to Section 2.07 or Section 2.08 hereof.

"**Assessment Unit**" means the apportionment unit utilized to determine the Assessment for each parcel of property, as set forth in the Initial Assessment Resolution. "Assessment Units" may include, by way of example and not limitation, one or a combination of the following: front footage, land area, improvement area, equivalent residential connections or units, permitted land use, trip generation rates, rights to future trip generation capacity under applicable concurrency management regulations, property value or any other physical characteristic or reasonably expected use of the property that is related to the Capital Improvements or Essential Services to be funded from proceeds of the Assessment.

"Capital Asset" means property, plant and equipment and intangible assets intended or likely to produce benefits or relieve burdens in future accounting periods beyond the current period.

"**Capital Cost**" means all or any portion of the **costs** ~~expenses~~ that are properly attributable to the acquisition, design, **permitting, preparation,** construction, installation, reconstruction, renewal or replacement (including demolition, environmental mitigation and relocation) of **a** Capital **Asset** ~~Improvements~~ under generally accepted accounting principles; and including reimbursement to the City for any funds advanced for Capital Cost and interest or debt service on any interfund or intrafund loan or other Obligations for such purposes.

"**Capital Improvements**" means **one or more C**~~c~~apital**Assets** ~~improvementsconstructed or installed~~**acquired, designed, permitted, prepared, constructed, installed, reconstructed, renewed or replaced (including demolition, environmental mitigation and relocation) in whole or in part** by the City which provide a special benefit to lands within an Assessment Area. The term shall include the recovery of costs from undeveloped or underdeveloped lands that benefit from the availability of Capital Improvements as a supplemental or alternative means to pay for or reimburse the City for providing such improvements.

"**City**" means the City of Callaway, Florida.

"**Commission**" means the City Commission of the City of Callaway, Florida.

"**Essential Services**" means the services, facilities, or programs which provide a special benefit to, or relieve a burden attributable to, lands within an Assessment Area.

"**Final Assessment Resolution**" means the resolution described in Section 2.07 hereof, which shall confirm, modify or repeal the Initial Assessment Resolution and which shall be the final proceeding for the imposition of an Assessment.

"**Fiscal Year**" means the period commencing on October 1 of each year and continuing through the following September 30, or such other period as may be prescribed by law as the Fiscal Year for the City.

"**Government Property**" means property owned by the United States of America, the State of Florida, a county, a special district, a municipal corporation, or any of their respective agencies or political subdivisions.

"**Initial Assessment Resolution**" means the resolution described in Section 2.03 hereof, which shall be the initial proceeding for the imposition of an Assessment.

"**Obligations**" means bonds or other evidence of indebtedness including but not limited to, notes, commercial paper, capital leases or any other obligation issued or incurred to finance Capital Improvements which may be secured, in whole or in part, by proceeds of the Assessments.

"**Ordinance**" means this Capital Improvement and Essential Services Assessment Ordinance.

"**Pledged Revenue**" means, as to any series of Obligations, (A) the proceeds of such Obligations, including investment earnings, (B) proceeds of the Assessments pledged to secure the payment of such Obligations, and (C) any other legally available non-ad valorem revenue pledged, at the Commission's sole option, to secure the payment of such Obligations, as specified by the Ordinance and any resolution authorizing such Obligations.

"**Property Appraiser**" means the Bay County Property Appraiser.

"**Resolution of Intent**" means the resolution expressing the Commission's intent to collect Assessments on the ad valorem tax bill required by the Uniform Assessment Collection Act.

"**Service Cost**" means all or any portion of the expenses that are properly attributable to the provision of Essential Services under generally accepted

accounting principles; and including reimbursement to the City for any funds advanced for such expenses and interest on any interfund or intrafund loan for such purposes.

"**Tax Collector**" means the Bay County Tax Collector.

"**Tax Roll**" means the real property ad valorem tax assessment roll maintained by the Property Appraiser for the purpose of the levy and collection of ad valorem taxes.

"**Uniform Assessment Collection Act**" means sections 197.3632 and 197.3635, Florida Statutes, or any successor statutes authorizing the collection of non-ad valorem assessments on the same bill as ad valorem taxes, and any applicable regulations promulgated thereunder.

SECTION 2. From and after the effective date of this Ordinance, Section 2.01 of Ordinance 876 of the City of Callaway, Florida is amended to read as follows (deleted text stricken, new text **bold and underlined**):

SECTION 2.01. AUTHORITY. The Commission is hereby authorized to impose Assessments against property located within an Assessment Area to fund **the Capital Cost or Service Cost of** Capital Improvements or Essential Services**incurred by the City. If more than one parcel is assessed, then the**~~. The~~ Assessment shall be computed in a manner that fairly and reasonably apportions the Capital Costs or Service Costsamong the parcels of property within an Assessment Area, based upon objectively determinable Assessment Units related to the value, use or physical characteristics of the property**, except where the special benefit or burden relief provided by a Capital Improvement or Essential Service is provided predominantly to a single parcel of property, the resolution shall uniquely assess only that parcel the Capital Cost or Service**

Cost thereof, as in the case of the Capital Cost to abate a public nuisance on a single parcel of property.

SECTION 3. From and after the effective date of this Ordinance, Section 2.02 of Ordinance 876 of the City of Callaway, Florida is amended to read as follows (deleted text stricken, new text **bold and underlined**):

SECTION 2.02. CREATION OF ASSESSMENT AREAS. The Commission is hereby authorized to create Assessment Areas by resolution. Assessment Areas may be within or without the City limits. Provided, however, any Assessment Area or portion thereof extending outside of the City limits must be within an unincorporated service area created pursuant to the Municipal Public Works Act, Chapter 180, Florida Statutes. Each Assessment Area shall encompass only that property specially benefited by the Capital Improvements or Essential Services proposed for funding from the proceeds of Assessments to be imposed therein. The resolution creating each Assessment Area shall include brief descriptions of the proposed Capital Improvements or Essential Services, a description of the property to be included within the Assessment Area, and specific legislative findings that recognize the special benefit **or burden relief** to be provided by each proposed Capital Improvement or Essential Service to property within the Assessment Area. Properties in any Assessment Area need not be adjacent or contiguous to any other property in an Assessment Area.

SECTION 4. From and after the effective date of this Ordinance, Section 2.03 of Ordinance 876 of the City of Callaway, Florida is amended to read as follows (deleted text stricken, new text **bold and underlined**):

SECTION 2.03. INITIAL ASSESSMENT RESOLUTION. The initial proceeding for imposition of an Assessment shall be the Commission's adoption of an Initial Assessment Resolution. The Initial Assessment Resolution shall:

(A) describe the Capital Improvements or Essential Services proposed for funding from proceeds of the Assessments;

(B) estimate**, or if known, state** the Service Cost or Capital Cost;

(C) **if more than one parcel of property is assessed,** describe with particularity the proposed method of apportioning the Service Cost or Capital Costamong the parcels of property located within the Assessment Area, such that the owner of any parcel of property can objectively determine the amount of the Assessment, based upon its value, use or physical characteristics; and

(D) include specific legislative findings that recognize the equity provided by the apportionment methodology **or, if applicable, that recognize the equity provided by assessing a predominantly benefitted or relieved, individual parcel the Capital Cost or Service Cost uniquely attributable to that parcel**.

SECTION 5. All ordinances or parts of ordinances in conflict herewith are repealed to the extent of such conflict.

SECTION 6. The appropriate officers and agents of the city are authorized and directed to codify, include and publish in electronic format the provisions of this Ordinance within the Code of Ordinances of the City of Callaway, Florida. Sections numbers may be assigned and changed whenever necessary and convenient.

SECTION 7. This Ordinance shall take effect immediately upon passage.

PASSED, APPROVED AND ADOPTED at the regular meeting of the City Commission of the City of Callaway, Bay County, Florida, on the ____ day of _____20.

CITY OF CALLAWAY, FLORIDA

_____

Thomas W. Abbott, Mayor

ATTEST:

_____

Sandra B. Hirth, City Clerk

City of Callaway Board of Commissioners
Agenda Item Summary

December 9, 2014

First Reading – Ordinance No. 950 – Amending the Nuisance Abatement Code

1. PLACED ON AGENDA BY:

J. Michael Fuller, City Manager

2. AGENDA:

PRESENTATION ☐
PUBLIC HEARING ☐
CONSENT ☐
REGULAR ☒

3. IS THIS ITEM BUDGETED (IF APPLICABLE)?: *YES* ☐ *NO* ☐

N/A

4. BACKGROUND: ***(WHY, WHAT, WHO, WHERE, WHEN, HOW, & IDENTIFY ALL ATTACHMENTS)***

If adopted by the Commission, Ordinance No. 950 will amend the City's Nuisance Abatement Code, Chapter 9.7 of the Callaway Code of Ordinances, clarifying the abatement process and allowing the use of assessments to collect cost of abatement.

Attachments

- Ordinance No. 950

5. REQUESTED MOTION/ACTION:

Staff recommends that the Commission approve the first reading of Ordinance No. 950 and schedule the date for a public hearing.

ORDINANCE NO. 950

AN ORDINANCE OF THE CITY OF CALLAWAY, FLORIDA, AMENDING AND READOPTING THE "NUISANCE ABATEMENT CODE", CHAPTER 9.7 CALLAWAY CODE OF ORDINANCES; AMENDING DEFINITIONS;CLARIFYING THE CONTENTS OF THE NOTICE AND ORDER OF ABATEMENT; CLARIFYING ACTIONS AVAIALBLE TO THE CITY UPON FAILURE TO COMPLY WITH A NOTICE AND ORDER OF ABATEMENT; SHORTENING THE CITY'S PERIOD OF FOREBEARANCE OF FORECLOSURE FROM TWO YEARS TO THREE MONTHS; PROVIDING THAT THE CITY MAY COLLECT THE COST OF ABATEMENT THROUGH THE LEVY OF A NON-AD VALOREM ASSESSMENT; PROVIDING THAT THE CITY MAY UTILIZE THE UNFIFORM METHOD OF COLLECTION AUTHORIZED BY FLORIDA STATUTES; PROVIDING FOR SEVERABILITY; REPEALING ORDINANCE 508 AND ANY OTHER ORDINANCE OR PROVISIONS IN CONFLICT HEREWITH; PROVIDING FOR AN EFFECTIVE DATE.

NOW THEREFORE, BE IT ENACTED BY THE PEOPLE OF THE CITY OF CALLAWAY, FLORIDA:

Section 1. From and after the effective date of this Ordinance, Chapter 9.7 of the City of Callaway Code of Ordinances is amended to read as follows(deleted text ~~stricken~~, new text **bold and underlined**):

Sec. 9.7-1. - DEFINITIONS.

As used in this chapter the following terms shall have the meanings respectively ascribed to them in this section:

Construction debris means any refuse generated by a contractor, subcontractor or other person or supplier during the course of repair, addition to, or construction of any building or structure whether such activity requires a building permit or not.

Demolition debris means any refuse generated through the cutting or trimming of trees, bushes or shrubbery for hire, or the destruction or demolition, in whole or in part, of

any structure or building, or the clearing of land by any person, whether for hire or by the owner.

Enforcement Officer shall mean any Code Enforcement Officer or law enforcement officer of the City of Callaway.

Garbage shall mean any putrescible animal and vegetable wastes resulting from the handling, storage, preparation, cooking, sale or consumption of food.

*Inspector*means that officer or employee of the City designated by the City Commission.

Litter means any garbage; rubbish; trash; refuse; cans; bottles; boxes; containers; paper; tobacco products; tires, appliances; mechanical equipment or part; building or construction material; tool; machinery; wood; motor vehicle or motor vehicle part; vessel; aircraft; farm machinery or equipment; sludge from a waste treatment facility; water supply treatment plan, or air pollution control facility; or substance in any form resulting from domestic, industrial, commercial, mining, agricultural, or governmental operations.

Nuisance: The term "nuisance" shall mean any of the following:

(1) Any accumulation of letter, refuse, construction or demolition debris, trash, junk and other abandoned materials, metals, lumber or other things.

(2) Any excessive accumulation of untended growth of weeds, underbrush or other dead or living plant life upon an improved lot, tract or parcel of land, in the manner that such lot, tract or parcel of land shall or may become infested or inhabited with rodents, vermin or snakes, or may become a breeding place for mosquitos, or threaten or endanger the public health and welfare, or may reasonably cause disease, or adversely affect and impair the economic welfare of the adjacent property.

(3) Any unfit or unsafe dwelling or structure.

(4) Any weeds which exceed one foot in height upon an improved lot, tract or parcel of land, or on an undeveloped lot, tract or parcel of land within a subdivision which has had the natural vegetation cleared.

(5) All unnecessary or unauthorized noises and annoying vibrations, including animal noises.

(6) All disagreeable or obnoxious odors and stenches, as well as the conditions, substances or other causes that give rise to the emission or generation of such odors and stenches.

(7) The carcasses of animals or fowl not disposed of within a reasonable time after death.

(8) The pollution of any public well or cistern, stream, lake, canal or body of water by sewage, dead animals, creamery, industrial wastes or other substances.

(9) Any building, structure or other place or location where any activity which is in violation of local, state or federal law is conducted, performed or maintained.

(10) Any accumulation of stagnant water permitted or maintained or allowed to accumulate on any lot, piece of ground, or premises, including that water confined in a swimming pool, spa or hot tub.

(11) Dense smoke, noxious fumes, gas, soot or cinders, in unreasonable quantities.

(12) Unsheltered storage for a period of thirty (30) days or more within the corporate limits of this city (except in licensed junkyards) of old and unused stripped junk and other automobiles not in good and safe operating condition, and of

any other vehicles, machinery, implements, or equipment or personal property of any kind which is no longer safely usable for the purposes for which it was manufactured, is hereby declared to be a nuisance and a danger to public health, safety and welfare.

(13) For the purpose of this ordinance, the term nuisance shall also include any condition or use of premises or of building exteriors which is detrimental to the property of others or which causes or tends to cause substantial diminution in the value of other property in the neighborhood in which the premises are located. This includes, but is not limited to, the keeping or depositing on or the scattering over the premises of any of the following:

a. litter, junk, trash, or construction or demolition debris; and

b. abandoned, discarded, unused objects or equipment such as, but not limited to, automobiles, furniture, stoves, refrigerators, freezers, cans or containers.

(14) Any unauthorized obstructions to or interferences with the free public use of streets, rights-of-way and public thoroughfares including, but not limited to: (1) an annoyance to the public as to render the use of the street hazardous; (2) a hindrance or prevention of free and unobstructed use for travel which renders passage through the street more difficult or which increases the danger of injury to persons or property; (3) skating, skateboarding, or cycling on structures in streets, rights-of-way and public thoroughfares.

(15) Any building, structure or other property which contains graffiti visible from a public location.

~~(16) Such other acts or conditions which are declared by other ordinances to be or constitute nuisances.~~

(16) Any public nuisance know at common law or in equity jurisprudence or as provided by the Statutes of the State of Florida or ordinances of the City of Callaway.

(17) In regard to portable storage units:

a. Any placement or the permitting of any placement of more than one portable storage unit in the front yard of a residential premises where there is a dwelling;

b. Any placement of more than one portable storage unit on a vacant lot in a residential area;

c. Any continuous keeping of a portable storage unit on residential premises where there is a dwelling in excess of ten days in any 60-day period. In the event of damage to a premises caused by fire, storm, flood or declared government emergency, this period may be extended upon written approval of the city manager; or

d. Any placement or the permitting of any placement on a residential premises of a portable storage unit exceeding eight feet in width, 20 feet in length, and nine feet in height.

Portable storage unit shall mean any container designed for the storage of personal property which is typically rented to owners or occupants of property for their temporary use which is delivered and removed by truck. Examples of portable storage units include, but are not limited to, moving and storage containers, road and storage trailers and steel shipping containers.

*Refuse*means leavings, dregs, rubbish, trash or waste material.

Trash means all grass clippings, leaves, tree limbs, old furniture, mattresses, bed springs, small debris, non-putrescible solid waste, cloth, paper, cardboard, glass and other similar materials. The term "trash" shall not include anything weighing over 1,000 pounds, items over ten feet long or any debris or items generated by a contractor, or individual through construction or demolition.

*Underbrush*means any undergrowth or brush conducive to the collection of insects and rodents.

*Unfit or unsafe dwelling or structure*means any dwellings or structure or portions thereof and accessory buildings which are structurally unsafe, unstable, or unsanitary; inadequately provided with exit facilities; constitute a fire hazard; unsuitable or improper for the use or occupancy to which they are put; constitute a hazard to health or safety because of inadequate maintenance, dilapidation, obsolescence or abandonment; dangerous to life or property of the occupant thereof or of the surrounding area; unfit for human habitation if so intended or used; or otherwise in violation of the housing, building, electrical, plumbing, mechanical, sanitation and fire codes of the city and/or county.

*Weeds*means any plants which are useless to men or injurious to crops, grasses or flowers.

Sec. 9.7-2. PROHIBITED ACTS; PENALTY.

Any ~~person~~**owner or occupant of a premises knowingly**creating or maintaining a nuisance within the City shall be guilty of an offense**. Where the nuisance is maintained by a fictitious person owning or occupying the premises, a natural person serving as an officer, manager or other agent of the owner or occupant who knowingly permits the nuisance to be maintained shall be guilty of the same offense as the fictitious person.**

Sec. 9.7-3. POWERS AND DUTIES OF THE ENFORCEMENT OFFICER; DETERMINATION OF INTERESTED PARTIES.

(a) *Generally.* The Enforcement Officer shall be charged with the duty of administering the applicable standards and securing compliance therewith and in furtherance of this responsibility, the Enforcement Officer shall;

(1) Make such inspections as may be necessary to effectuate the

purposes and intent of this ordinance.

(2) Investigate any complaints of alleged violation of this ordinance and maintain a log reflecting the resolution thereof; however, only matters or conditions pertinent to the existence of a nuisance, as defined herein shall be considered or reported by the Enforcement Officer.

(b) *Preparation of notice and order generally.* When the Enforcement Officer verifies the existence of a nuisance ~~involving an unfit or unsafe structure~~, it shall be his duty to promptly prepare and submit to the City ~~Planner~~**Manager a proposed form of** the notice and order required by this ~~ordinance~~**chapter**. The City ~~Planner~~**Manager or his or her designee, shall review, approve or modify and execute the form of notice and order and**, with assistance of the city attorney, shall determine the owner**(s)** of record of the real estate upon which the nuisance is located, and send **the owner(s)**a notice and order of **abatement, referred to in this chapter as the notice and order.**~~condemnation to said party.~~ In addition, **the**notice**and order**shall be given to the **record** lessee**(s)**~~or occupants~~, if any, and persons of record interest~~,~~**(**including **by way of example and not limitation** mortgagee, contract purchaser, agent with power of attorney, and any person claiming an interest in the property**) and, by the initial posting of notice upon the dwelling or structure in question, to any occupants of that dwelling or structure. All such persons are referred to as the "interested parties" in this chapter**.

~~(c) Where the Enforcement Officer verifies the existence of a nuisance not involving an unsafe or unfit structure, the Enforcement Officer shall serve the notice and order upon the record owner of the premises reflected by the latest tax rolls and upon any occupant of the premises, if other than the owner.~~

~~(d) Where the Enforcement Officer verifies the existence of a nuisance involving~~

~~public streets, rights-of-way or public thoroughfares, the Enforcement Officer shall serve a citation on the offender as provided in the City of Callaway Citation Ordinance.~~

Sec. 9.7-4. **NOTICE AND ORDER OF ABATEMENT** ~~**ENFORCEMENT OFFICER**~~**.**

(a) The notice and order ~~of the Enforcement Officer~~ may require the cutting of weeds or underbrush or the removal of rubbish or such other measures as are reasonably necessary to abate the nuisance.

(b) The notice and order ~~of the Enforcement Officer~~ may require the vacation, **repair, restoration or replacement** ~~demolition or removal~~ of any unfit or unsafe dwelling or structure**or of any part or parts thereof, including accessory building(s)** ~~, or may order the repair, restoration or replacement of any part of same~~; provided, however, that **if the inspector shall determine that the cost to repair, restore or replace any such dwelling or structure or part thereof, including accessory building(s) in compliance with all applicable building and life safety codes,** ~~no building or structure shall be subject to repair, restoration or replacement where the cost of repairing, restoring or replacing any part or parts thereof~~ would exceed fifty percent (50%) of the value of such**dwelling or** structure **or part thereof, including accessory building(s) (as determined by reference to the most recent, final ad valorem tax roll prepared by the Bay County Property Appraiser)**~~after repair, restoration or replacement.~~ **he may only order the vacation and demolition and removal of the dwelling or structure.**

(c) **In addition, due to a variety of reasons, including but not limited to abandonment, neglect, inadequate property management, or obsolescence, the condition(s) constituting a danger or nuisance to the public cannot be made safe, the notice and order shall require the vacation of the dwelling or structure involved and order the demolition and removal of the dwelling or structure or any part or parts**

thereof, including accessory building(s), contributing to the nuisance. Factors evidencing a determination that a property cannot be made safe may include, but not be limited to: a history of unsecured or un-securable, dangerous conditions; a history demonstrating the propertyowner's failure to exercise reasonable control over the property to keep it secure or safe; a history showing that the property has become an attractive nuisance to children or transients; a history showing a proliferation of criminal activity due to dilapidated conditions and lack of management and control over the premises; a history showing that notwithstanding the reasonable efforts of law enforcement or code enforcement personnel, or both, the property remains in a condition which is imminently dangerous to the public health, safety and welfare.

(d) A notice and order requiring the repair, restoration or replacement of any dwelling, structure or part or parts thereof, including accessory building(s), shall require that the work meet the standards specified by all applicable building and life safety codes.

~~(c)~~(e) The notice and order shall ~~include:~~be in writing, signed by the City Manager or his or her designee, with a ~~(1)The~~ description of thenuisance and a ~~location of the buildings and/or land involved either by street address or by~~ legal descriptionof the realty where it is located, including the street address, and shall state what the City orders to be done about the condition and the date within which the work ordered to be done is to be completed. The notice and order shall state that it may be appealed within thirty (30) days by written application to the City Manager. The notice and order shall describe the condition(s) found by the inspector to constitute a public nuisance pursuant to this chapter. If the notice and order requires demolition and removal of an unfit or unsafe dwelling or structure, or part or parts thereof, including an accessory building(s), it shall describe the condition(s) found by the inspector, upon consultation

with the City Attorney, to constitute such a public nuisance pursuant to this chapter as to make demolition reasonable. A notice and order requiring demolition and removal shall also state that interested parties may elect to abate the nuisance by repair, restoration or replacement of the subject unfit or unsafe dwelling or structure, or part or parts thereof, including accessory building(s).

~~(2)A statement providing an accurate description of the nuisance for which the notice is issued.~~

~~(3)Specification of the section or sections of this chapter upon which the notice of violation is based.~~

~~(4)If the nuisance does not involve an unsafe or unfit structure, a statement ordering what shall be done to abate the nuisance.~~

~~(5)If the nuisance does involve an unfit or unsafe structure, a statement of the nature and extent of such repairs or alterations necessary to comply with this ordinance.~~

~~(6)If the nuisance involves an unfit or unsafe structure and is of such a character that repairs or alterations cannot bring the building into compliance, a statement to this effect and an order of demolition of the building indicating fully the reason therefor.~~

~~(7)If abatement of the nuisance or demotion of a structure is necessary for compliance, a specification of time for performing same shall be stated in the notice which shall not be less than ten (10) days nor more than ninety (90) days.~~

~~(8)The name or names of persons upon whom the notice is served as stated in section 3(a).~~

~~(9)A statement advising that upon the owners failure to comply with the notice, the city may vacate, demolish, or remove or otherwise abate the nuisance in accordance with the order~~

~~stated in the notice, and at the expense of such performance by the city shall be charged against the real property and the assessment when made shall constitute a lien upon said property by the city.~~

~~(10)A statement advising of the procedures for review of the action of the Enforcement Officer as set out in section 10.~~

~~(d)~~(f) In the case of an unfit or unsafe dwelling or structure **or part or parts thereof, including accessory building(s),** this notice and order shall require the owner **or** ~~and~~ other interested parties within thirty (30) days after service to obtain a permit and begin specified repairs or improvements, or begin to demolish and remove the dwelling or structure or portion thereof. This work shall be completed within sixty (60) days from the date of the permit for repair or demolition. Any demolition permit necessary as a result of any **notice and order** ~~condemnation~~ herein shall not require a fee.

~~(e)~~**(g)** Except as otherwise provided in this **chapter** ~~ordinance~~ for unsafe or unfit dwellings or structures the **City Manager shall** ~~inspector may~~ order such work to be completed within such time as he determines to be reasonable considering the nature of the nuisance, the danger to the public and the amount of work involved to abate the nuisance.

~~(f)~~**(h)** When the county health officer or licensed pest control operator verifies the existence of a rodent infestation in any dwelling or structure that is to be demolished and removed, in order to preclude the migration of rodents, the notice and order ~~of the inspector~~ shall require that effective rodent extermination methods be employed by a licensed structural pest control operator prior to demolition. Extermination techniques shall include ectoparasite control measures.

(i) An order to vacate, demolish and remove an unfit or unsafe dwelling or

structure or any part or parts thereof, including accessory building(s), shall not preclude the immediate repair, restoration or replacement thereof by an interested party entitled to effect such work (herein collectively an applicant).In order to make the election available in this subsection and avoid the demolition and removal, within thirty (30) days after service of the notice and order of demolition, the applicant must submit a competent application for all or a material portion of the work needed to abate the nuisance and in good faith commence and diligently and continuously pursue all the work through completion. The work must meet the standards specified by all applicable building and life safety codes. In the event that the initial permit application does not cover all the work, the application must be accompanied by a description of the remainder of the work to be done and include a schedule of all the work with milestones reasonable and customary in the construction industry.The City Manager shall either accept or reject the application as covering a material portion of the work, the overall work described as sufficient to abate the nuisance and the schedule of work/milestones as reasonable.Should the City Manager find that the initial application does not cover a material portion of the work, that the overall work described is insufficient to abate the nuisance, or that the schedule of work/milestones is not reasonable, he or she shall advise the applicant who shall have ten (10) days to correct the deficiency in writing or appeal in writing to the City Commission which shall hear the matter at its next regular or special meeting.The only issues before the City Commission shall be whether to accept or reject the matter(s) rejected by the City Manager.The City Commission may not amend the application, description of work or schedule without the written consent of the applicant.The appeal shall be conducted as a quasi-judicial, de novo hearing pursuant the city's Land Development Code, except that only the applicant and the City Manager, or their respective designees, shall be

entitled to present evidence.No other persons shall be considered adversely affected persons.Public comment, but only as commentary, shall be permitted.The applicant shall bear the burden of proof.If the applicant's position is accepted then the applicant shall be required to immediately commence and diligently and continuously pursue the work to abate the nuisance strictly in accord with the schedule upon penalty of demolition as provided in Section 9.7-7(b).If the applicant's position is not affirmed, the applicant shall have thirty (30) days after entry of the City Commission's order to comply with the initial notice and order of demolition and removal, and no permit to repair, restore or replace shall be issued.

Sec. 9.7-5. SERVICE OF NOTICE AND ORDER.

It shall be the duty of the ~~Enforcement Officer~~**City Manager or his or her designee** to see to it that the required notice and order is delivered to the interested parties by personal delivery of copy thereof to the party to be notified, or by leaving such copy at his usual place of abode with some person of the family above fifteen (15) years of age and informing such person of the contents thereof, or by either registered or certified United States mail with return receipt requested**.** ~~, or, if~~**If**the name of ~~any such~~**the** party **to be notified** or his place of residence or his post office address cannot be ascertained after diligent search, or in the event a notice **and order** sent by either registered or certified mail shall be returned undelivered ~~and the person to be notified is not residing within the city~~, **notice shall be made** by publishing a copy thereof once a week for two (2) consecutive weeks in a newspaper of general circulation within the city. A copy of such notice and order shall be posted in a conspicuous place ~~at City Hall and~~ upon such dwelling or structure**in question, in a conspicuous place at City Hall, and upon the City website.The subsequent removal or illegibility of the notice and order posted upon the dwelling or structure shall not render the posting invalid.**~~However, if the violation is related to a~~

~~nuisance in a public street, right of way or public thoroughfare, the Enforcement Officer shall provide service on the offender.~~

Sec. 9.7-6. EXTENSION OF TIME TO COMPLY.

(a) In the case of an unfit or unsafe building or structure if the interested parties shall have obtained a building or demolition permit within the thirty (30) day period and in good faith and in due time begun work to comply with the order**and diligently pursue the work**, but it appears that they will not be able to complete the work by the date ordered, they may file a written request **with the City Commission** stating the reasons they have been unable to complete compliance**.**~~and if~~**If**reasonable grounds are shown therefor, the **City Commission** ~~city clerk~~ is authorized to issue an ~~amended~~ order authorizing an extension of time, not to exceed sixty (60) days, in which to complete compliance with the original **notice and** order.**The City Commission shall consider the request at its next regular or a special meeting, give the requesting party an opportunity to be heard, and grant the request only for good cause shown.**

(b) In the case of a nuisance which is not an unfit or unsafe dwelling or structure the ~~Enforcement Officer~~**City Manager or his or her designee** may grant extensions of up to sixty (60) days to abate the nuisance as are reasonably necessary under the circumstances upon written request from the interested parties stating the reasons they have been unable to complete compliance and showing reasonable grounds for such failure to complete compliance.

(c) Violations of this ordinance which constitute a nuisance in a related to public streets, rights-of-way and public thoroughfares shall be abated immediately.

(d) **Should the interested parties, through no fault of their own, be unable to complete compliance by the date ordered in the original notice and order nor by any extension date granted pursuant to this section, the** ~~The~~City Commission, in exceptional

cases, upon written request, may extend the completion date ~~of the Enforcement Officer~~ as merited by special hardship, unusual difficulty, or uniqueness of the situation; however, in no event shall the completion date extend beyond a maximum period of one hundred eighty (180) days.

Sec. 9.7-7. CITY ACTION ON FAILURE TO COMPLY.

(a) If the interested party(s) shall fail to comply with an order made pursuant to the provisions of this chapter within the time therein fixed or extended, the City, acting through the City Manager, is authorized to abate the nuisance in accordance with the notice and order, either with City forces or by independent contractor(s) selected through the City's procurement process.

(b) If the interested party(s) respecting an unfit or unsafe dwelling or structure or any part or parts thereof, including accessory building(s) which are the subject or an order to demolish and remove shall timely elect to repair, restoration or replacement as provided in this chapter but fail to timely obtain the required permits, or fail to timely commence and continuously and diligently pursue the work, the City, acting through the City Manager, is authorized to effect the ordered demolition and removal (including work in progress if work has been commenced) either with City forces or by independent contractor(s) selected through the City's procurement process.

(c) In the event of any failure to comply specified in this section or under this chapter, the City Manager and the City Attorney are authorized to commence on behalf of the City an action in circuit court against the interested party(s) to determine the validity of this chapter on its face and as applied, to require the interested party(s) to comply with the notice and order and, in the absence of compliance within a time specified by the court, to authorize the City to abate the nuisance as specified in the notice and order or as pleases the court, and to determine the amount and validity of the

lien or assessment to be imposed or levied against the subject property to pay the cost of abatement. In the event the City Commission shall by resolution determine to borrow the funds required to pay the cost of abatement and to pledge the proceeds of the lien or assessment to repay the loan, the City Manager and City Attorney are authorized to seek on behalf of the City pursuant to Chapter 75, Florida Statutes, validation of the City's authority to incur the debt, issue the certificates or bonds evidencing the debt and the legality of all the proceedings in connection therewith. In the event validation proceedings are commenced, the City Manager is directed to serve upon the interested parties notice of their right to intervene in those proceedings.

~~(a) If the owner or other parties in interest fail to repair, restore or replace such parts of the dwelling or structure within the time permitted by the notice and order of the Enforcement Officer, and in the absence of extenuating circumstances as would justify an extension of the time period therefor, the city clerk may order a vacation of the premises until compliance or a demolition of the structure.~~

~~(b) In the event that the owner or other parties in interest shall fail to comply with an order made pursuant to the provisions of this ordinance within the time therein fixed, the City, acting through the Director of Public Works, is authorized to vacate, demolish or remove or otherwise abate the nuisance in accordance with such order, either with City forces or by independent contractor submitting the lowest and best bid.~~

Sec. 9.7-8. ASSESSMENT OF COSTOF ABATEMENT; LIEN.

(a) Upon expiration of the thirty (30) day appeal period with no appeal having been taken, the City ~~Planner~~**Manager**, after proceeding under this ~~ordinance~~**chapter**, shall as often as may be convenient report the action taken toward abatement of the nuisance by the City and the **C**ity**C**ommission shall assess the entire cost of such action against the real property, which assessment, when made shall constitute a lien upon said property **in**

favor of ~~by~~ the City. The lien of the City shall encompass ~~in addition to the abatement~~ costs**of determining the nuisance, effecting** ~~for~~ the vacation**, securing the property, removing or abating the nuisance, demolishing and removing the dwelling or structure and accessory building(s) when applicable,** ~~or removal of the facility~~ all administrative, legal, postal and publication expenses, as well as rodent extermination when employed, **and the fees of independent experts offering opinions, reports or testimony concerning the nuisance or abatement,** as well as all other direct or indirect costs associated therewith. **All such costs and expenses are collectively referred to as the abatement cost. To the extent permitted by law, the** ~~The~~ lien upon the property **for the abatement cost** shall be superior to **the interests of** all others **receiving notice and an opportunity to administratively appeal the notice and order,** except taxes.

(b) The City ~~Planner~~**Clerk** shall **record a notice and claim of** ~~file such~~ lien in the County's Official Record Book showing the nature of such lien, the amount thereof, and ~~an accurate~~**a** legal description of the property, including the street address, **and** ~~which lien shall date from the date of filing and recite~~ the names of all **interested parties known to the City** ~~persons notified or interested parties~~. Such municipal lien shall bear interest from said date at the rate of ten per cent (10%) per ~~annum for individuals and fifteen per cent (15%) for corporation owners~~ and shall be enforceable **by foreclosure against the property** if unsatisfied after the expiration of **three months** ~~two (2) years~~ from the date of ~~filing~~**recording the notice and claim**~~of such notice~~ of lien, **or enforceable** as other liens may be enforced by the City. ~~All such recorded liens shall be included in a municipal tax deed sale and no such deed shall be issued by the City Clerk unless full payment of principal and interest is received.~~ Upon notice of an impending county tax deed sale, the ~~City Planner~~**tax collector** shall request the Clerk of the Circuit Court to collect all monies due the City, including such municipal lien with interest.

(c) In addition, the City may collect the abatement cost through the additional and alternative method of levying a special assessment, sometimes called a non-ad valorem assessment, upon the subject property benefitted by the abatement. Collection shall be through the methods authorized by Ordinance No. 876, or any amending or succeeding ordinance, and shall include without limitation the method of collection specified in sections 197.3632 and 197.3635, Florida Statutes, or any amending or succeeding statute. It is the legislative intend of this chapter to authorize the collection of abatement costs by assessment placed on the same bill as ad valorem taxes pursuant to applicable statutes and regulations promulgated thereunder. In the event this additional and alternative method of collection is used, the abatement cost shall include the fees incurred by the City for legal counsel, independent experts offering opinions, reports or testimony concerning the abatement benefit to the subject property or any other matters related or useful to the levy. This method of collection is cumulative to any other method of collection available to the City at law or equity.

Sec. 9.7-9. APPEALS GENERALLY.

(a) Any interested party may appeal **to the City Commission** the **interpretation or application of the code section, ordinance, statute, regulation or common law principle on which the notice and order** ~~decision~~ of the ~~Enforcement Officer or~~ City ~~Planner~~**Manager**~~to the City Commission upon the~~**by** filing**with the City Clerk**, within thirty (30) days after service of the ~~Enforcement Officer or~~ City ~~Planner's~~**Manager's** notice and order, ~~of an application to the building official,~~ setting forth the grounds for the appeal. Upon receipt of the notice of appeal, the City ~~Planner~~**Clerk** shall forthwith transmit a copy of the notice of appeal, together with all related documents of **the Enforcement Officer's** ~~his~~ department, to the City Commission. Within ten (10) days after the filing of notice of appeal, the City ~~Commission~~**Clerk** shall schedule a date for the

hearing thereof and give notice of the date for the hearing to the interested parties, in a manner as would afford them not less than ten (10) days' notice. Under no circumstances shall the ~~Commission~~**Clerk** establish a hearing date beyond sixty (60) days from the filing of the notice of appeal.

(b) ~~All appeals proceedings shall be public and notice thereof published in a newspaper of general circulation within the city at least ten (10) days prior to the date of the hearing. The findings of the commission shall be encompassed in a resolution stating with particularity the grounds for the decision.~~

~~(c)~~ All interested parties shall have thirty (30) days within which to comply with the resolution of the Commission.

~~(d)~~**(c)** Nuisances related to public streets, rights-of-way and public thoroughfares shall be abated immediately. However, offenders shall have the right to appeal decision of abatement to the City Commission for determination of whether the conduct constituted a nuisance. If there is a determination that such conduct did not constitute a nuisance, then any fines or penalties assessed against the alleged offender shall be forfeited by the City.

Sec. 9.7-10. FINAL APPEAL TO CIRCUIT COURT.

An interested party, having exhausted his administrative remedies before the **C**~~c~~ity**C**~~c~~ommission, may appeal to the circuit court the decision of the **C**~~c~~ommission in like manner of appeals from county courts.

Sec. 9.7-11. APPEARANCE BY COUNSEL; WITNESSES SWORN.

Any interested party appearing before the **C**~~c~~ity**C**~~c~~ommission may appear in person, by counsel, or by an agent possessing power of attorney provided the agency's instrument appears in the county's official record book, but may not appear through any person otherwise a stranger to the record. All witnesses appearing before the **C**~~c~~ity**C**~~c~~ommission in proceedings under this chapter shall be sworn by the mayor or in

his absence, by the person acting in his stead, except counsel representing a client.

Sec. 9.7-12. DUTIES OF OTHER DEPARTMENT.

(a) Members of the fire department, law enforcement, and public works department shall make written reports to the Enforcement Officer, of all dwellings or structures which appear to be substandard housing within the terms of this ordinance. Such reports shall be submitted to the Enforcement Officer as soon as practicable.

(b) In carrying out his responsibilities hereunder, the Enforcement Officer may request assistance from a health officer, to determine violations of municipal ordinances, or state law, and rules and regulations of a health officer.

Sec. 9.7-13. ENTRY POWERS.

The Enforcement Officers and his designees are hereby authorized to enter upon private property in order to enforce the provisions of this ordinance. When necessary to obtain such entry, the Enforcement Officer and his designees may institute proceedings to obtain a search warrant.

Sec. 9.7-14. ALTERNATIVE METHOD.

This chapter shall be deemed to provide an additional and alternative method for the doing of the things authorized hereby, including without limitation the levy of assessments, sometimes called non-ad valorem assessments, and shall be regarded as supplemental and additional to powers conferred by other laws, and shall not be regarded as in derogation of any powers now existing or which may hereafter come into existence. This chapter, being necessary for the health, safety, and welfare of the inhabitants of the City, shall be liberally construed to effect the purposes hereof.

Section 2. **REPEALER.**

Ordinance 508 and all ordinances in conflict or parts of ordinances in conflict herewith are repealed to the extent of such conflict.

Section 3. **SEVERABILITY.**

In the event that any portion of this Ordinance shall be determined to be unconstitutional or invalid for any reason, the remaining provision shall remain in full force and effect.

Section 4. **EFFECTIVE DATE.**

This Ordinance shall take effect upon passage.

PASSED, APPROVED AND ADOPTED this day of _____, 20.

CITY OF CALLAWAY, FLORIDA

_____

Thomas W. Abbott, Mayor

ATTEST:

_____

Sandra B. Hirth, City Clerk

City of Callaway Board of Commissioners
Agenda Item Summary

December 9, 2014

Resolution 14-24 Utility Service Disconnection and Reconnection Fees & Times

1. PLACED ON AGENDA BY:

J. Michael Fuller, City Manager

2. AGENDA:

PRESENTATION ☐
PUBLIC HEARING ☐
CONSENT ☐
OLD BUSINESS ☐
REGULAR ☒

3. IS THIS ITEM BUDGETED (IF APPLICABLE)?: YES ☐ NO ☐

N/A

4. BACKGROUND: (WHY, WHAT, WHO, WHERE, WHEN, HOW, & IDENTIFY ALL ATTACHMENTS)

Currently, the City imposes a disconnection/reconnection charge only when there has been a physical disconnection at the account address. Resolution #14-24 would amend the procedure for assessing these charges and redefines after hours and disconnection/reconnection fee amounts. A charge of $25.00 shall be imposed on any account that has failed to pay by the disconnect date and time, regardless if a physical disconnect has or has not been accomplished. An "after hours" reconnect charge of $55.00 shall be collected for a reconnection request to be completed after 4:00 p.m. Monday through Friday and on Saturday, Sunday or holiday.

Resolution #14-24 will help the City streamline its utility billing practice by simplifying the length of time it takes to assess disconnection charges. The Resolution also clarifies after hour times.

ATTACHMENT:

- Resolution #14-24

5. REQUESTED MOTION/ACTION:

Staff recommends the City Commission approve Resolution 14-24 amending certain fees and time for utility service disconnection and reconnection.

RESOLUTION 14-24

A RESOLUTION OF THE CITY OF CALLAWAY, FLORIDA, AMENDING RESOLUTION 08-29; AMENDING UTILITY SERVICE DISCONNECTION; AMENDING RECONNECTION CHARGES; REPEALING ALL RESOLUTIONS OR PARTS THEREOF WHICH ARE IN CONFLICT HEREWITH; AND PROVIDING FOR AN EFFECTIVE DATE.

WHEREAS, Resolutions 08-29 , 13-27 and 14-14 set utility rates and procedures for residential, commercial, industrial and bulk water and sewer utility service and related charges for the City of Callaway; and

WHEREAS, the City Commission of the City of Callaway has determined that it is fiscally sound and necessary to revise certain charges, dues dates and times.

NOW THEREFORE, BE IT RESOLVED BY THE CITY COMMISSION OF THE CITY OF CALLAWAY, FLORIDA, AS FOLLOWS:

SECTION 1. UTILITY SERVICE DISCONNECTIONS FOR NON-PAYMENT AND UTILITY SERVICE RECONNECTIONS.

A. DISCONNECT DATE AND TIME. Failure to pay in full by 5:00 p.m. on the 25th day of each month shall result in the disconnection of utility services. In the event the 25th is on Friday, Saturday, Sunday or a legal holiday, the utility bills are due and payable by 5:00 p.m. of the next full business day following the Friday, Saturday, Sunday or holiday.

B. RECONNECT CHARGE. A reconnection charge of $25.00 shall be imposed on any account that has failed to pay by the disconnect date and time, regardless if a physical disconnect has or has not been accomplished. An "after hours" reconnect charge of $55.00 shall be collected for a reconnection request to be completed after 4:00 p.m. Monday through Friday and on Saturday, Sunday or holiday. A reconnection charge is separate from and in addition to tampering charges imposed because of illegal reconnects and disconnect.

V. AUTHORIZATION AND REPEALER.

This Resolution is adopted pursuant to Sections 18-50, 18-107, and 18-300 of the Code of Ordinances of the City of Callaway authorizing the amendment of charges and fees by resolution by the City Commission. Those portions of Sections 18-50, 18-107 and 18-300 contained in this Resolution which are not amended or do not specify changes in the charges and fees are neither modified nor re-adopted by this Resolution and are included herein for convenient reference only. All resolutions or parts of resolutions in conflict herewith are hereby repealed to the extent of such conflict.

VI. EFFECTIVE DATE.

This resolution shall take effect as to allow the charges and fees to be collected on the utility bills due in December of 2014.

PASSED AND ADOPTED at the Regular Meeting of the City Commission of the City of Callaway, Florida this _____ day of December, 2014.

CITY OF CALLAWAY

_____
Thomas W. Abbott, Mayor

ATTEST:

_____
Sandra B. Hirth, City Clerk